ADAPTIVE SIGNAL CONTROL IV

Evaluation of the Adaptive Traffic Control System in Park City, Utah

Dr. Peter T. Martin
Associate Professor

Aleksandar Stevanovic
Research Associate

Ivana Vladisavljevic
Research Assistant

Department of Civil and Environmental Engineering
University of Utah
122 S. Central Campus Drive
Salt Lake City, Utah 84112

March 2006

Disclaimer

The contents of this report reflect the views of the authors, who are responsible for the facts and the accuracy of the information presented. This document is disseminated under the sponsorship of the Department of Transportation, University Transportation Centers Program, in the interest of information exchange. The U.S. Government assumes no liability for the contents or use thereof.

ABSTRACT

The purpose of this project is to evaluate the effectiveness of the future Utah Department of Transportation (UDOT) adaptive traffic control system (ATCS) on an arterial street network in Park City, Utah, that experiences both everyday and unpredictable changes in traffic flow. The two goals of this project are to assess the effectiveness of the future UDOT ATCS relative to the existing traffic control system and to assess the transfer of ATCS expertise from a vendor to UDOT personnel. This report contains the planned methodology for the project and the results from the "before" evaluation of the system. The proposed measures of effectiveness (stopped delay, corridor travel time, average speed, number of stops, cycle length, traffic demand) for the ATCS evaluation, the collection method for each, and their application range are listed. The data collection was done during three weeks in August before the start of the school season in Park City during the weekday peak and off peak periods on Tuesdays, Wednesdays, and Thursdays, under fair weather and dry pavement conditions. Stopped-time delay studies assess the influence of the ATCS system on stopped-time delay and stops at all 12 signalized intersections. Turning movement counts are used to relate relevant stopped delay studies with concurrent traffic demand at the intersections and also as inputs for traffic simulation runs. The results in this report represent measures of effectiveness from the traffic data collection before the ATCS is installed.

TABLE OF CONTENTS

1. INTRODUCTION 1
1.1 Background 1
1.2 Research on Adaptive Traffic Control at UTL 1
1.3 Research Goal and Objectives 2

2. METHODOLOGY 3
2.1 Criteria of Effectiveness 3
2.2 Measures of Effectiveness 4
2.3 Data Collection Periods 4
2.4 Stopped-Time Delay Studies 5
2.5 Travel Time/Delay Studies 5
2.6 Automatic Traffic Volume Counts 7
2.7 Turning Movement Counts 8
2.8 Statistical Data Analysis 8
2.9 Project Time Plan 9

3. RESULTS 11
3.1 Before Study 11

4. CONCLUSIONS 61

REFERENCES 63

LIST OF TABLES

Table 2.1: Proposed MOEs for ATCS Evaluation 4

Table 2.2: Data Collection Periods 5

Table 3.1: Average stopped delays per vehicle on intersection Kimball Junction 12

Table 2.2: Average stopped delays per vehicle on intersection SR224 – Landmark Dr..... 13

Table 3.3: Average stopped delays per vehicle on intersection Park Lane – SR248 14

Table 3.4: Average stopped delays per vehicle on intersection Park Lane – Deer Valley 15

Table 3.5: Average stopped delays per vehicle on intersection Bonanza Dr– SR248 16

LIST OF FIGURES

Figure 2.1: Travel time run – From Kimball Junction to Comstock Road 7

Figure 2.2: Turning movement counts – An extract from SYNCHRO file 8

Figure 2.3: Project Completion Time Plan 9

Figure 3.1: Average stopped delays by time of day and direction on intersection Kimball Junction..... 12

Figure 3.2: Average stopped delays by time of day and direction on intersection SR224 – Landmark Dr 13

Figure 3.3: Average stopped delays by time of day and direction on intersection Park Lane – SR248 14

Figure 3.4: Average stopped delays by time of day and direction on intersection Park Lane – Deer Valley 15

Figure 3.5: Average stopped delays by time of day and direction on intersection Bonanza Dr– SR248 ... 16

Figure 3.6: Travel time from Bitner Rd to Comstock Rd AM 18

Figure 3.7: Travel time from Comstock Rd to Bitner Rd AM 18

Figure 3.8: Travel time from Bitner Rd to Comstock Rd MD 19

Figure 3.9: Travel time from Comstock Rd to Bitner Rd MD 19

Figure 3.10: Travel time from Bitner Rd to Comstock Rd PM 20

Figure 3.11: Travel time from Comstock Rd to Bitner Rd PM 20

Figure 3.12: Histogram of travel times from Bitner Rd to Comstock Rd AM 21

Figure 3.13: Histogram of travel times from Comstock Rd to Bitner Rd AM 21

Figure 3.14: Histogram of travel times from Bitner Rd to Comstock Rd MD 22

Figure 3.15: Histogram of travel times from Comstock Rd to Bitner Rd MD 22

Figure 3.16: Histogram of travel times from Bitner Rd to Comstock Rd PM 23

Figure 3.17: Histogram of travel times from Comstock Rd to Bitner Rd PM 23

Figure 3.18: Total delay from Bitner Rd to Comstock Rd AM 25

Figure 3.19: Total delay from Comstock Rd to Bitner Rd AM 25

Figure 3.20: Total delay from Bitner Rd to Comstock Rd MD 26

Figure 3.21: Total delay from Comstock Rd to Bitner Rd MD 26

Figure 3.22: Total delay from Bitner Rd to Comstock Rd PM 27

Figure 3.23: Total delay from Comstock Rd to Bitner Rd PM 27

Figure 3.24: Histogram of total delays from Bitner Rd to Comstock Rd AM 28

Figure 3.25: Histogram of total delays from Comstock Rd to Bitner Rd AM 28

Figure 3.26: Histogram of total delays from Bitner Rd to Comstock Rd MD 29

Figure 3.27: Histogram of total delays from Comstock Rd to Bitner Rd MD 29

Figure 3.28: Histogram of total delays from Bitner Rd to Comstock Rd PM 30

Figure 3.29: Histogram of total delays from Comstock Rd to Bitner Rd PM 30

Figure 3.30: Number of stops from Bitner Rd to Comstock Rd AM 32

Figure 3.31: Number of stops from Comstock Rd to Bitner Rd AM 32

Figure 3.32: Number of stops from Bitner Rd to Comstock Rd MD 33

Figure 3.33: Number of stops from Comstock Rd to Bitner Rd MD 33

Figure 3.34: Number of stops from Bitner Rd to Comstock Rd PM 34

Figure 3.35: Number of stops from Comstock Rd to Bitner Rd PM 34

Figure 3.36: Histogram of number of stops from Bitner Rd to Comstock Rd AM 35

Figure 3.37: Histogram of number of stops from Comstock Rd to Bitner Rd AM 35

Figure 3.38: Histogram of number of stops from Bitner Rd to Comstock Rd MD 36

Figure 3.39: Histogram of number of stops from Comstock Rd to Bitner Rd MD 36

Figure 3.40: Histogram of number of stops from Bitner Rd to Comstock Rd PM 37

Figure 3.41: Histogram of number of stops from Comstock Rd to Bitner Rd PM 37

Figure 3.42: Average speed from Bitner Rd to Comstock Rd 39

Figure 3.43: Average speed from Comstock Rd to Bitner Rd 39

Figure 3.44: Turning Movement Counts for Kimball Junction (I-80 – SR224) 41

Figure 3.45: Turning Movement Counts for SR224 – Landmark Dr 42

Figure 3.46: Turning Movement Counts for SR224 – Utah Olympic Park 43

Figure 3.47: Turning Movement Counts for SR224 – Bear Hollow 44

Figure 3.48: Turning Movement Counts for SR224 – Canyons 45

Figure 3.49: Turning Movement Counts for SR224 – Payday 46

Figure 3.50: Turning Movement Counts for SR224 – Thaynes Canyon 47

Figure 3.51: Turning Movement Counts for Park Lane – SR248 48

Figure 3.52: Turning Movement Counts for Park Lane – Deer Valley 49

Figure 3.53: Turning Movement Counts for Bonanza Dr– Deer Valley 50

Figure 3.54: Turning Movement Counts for Bonanza Dr – SR248 51

Figure 3.55: Turning Movement Counts for Comstock Rd – SR248 52

Figure 3.56: Saturation Flow Counts for Kimball Junction 54

Figure 3.57: Saturation Flow Counts for SR224 – Landmark Dr 54

Figure 3.58: Saturation Flow Counts for SR224 – Utah Olympic Park 55

Figure 3.59: Saturation Flow Counts for SR224 – Bear Hollow 55

Figure 3.60: Saturation Flow Counts for SR224 – Canyons 56

Figure 3.61: Saturation Flow Counts for SR224 – Payday 56

Figure 3.62: Saturation Flow Counts for SR224 – Thaynes Cny 57

Figure 3.63: Saturation Flow Counts for Park Lane – SR248 57

Figure 3.64: Saturation Flow Counts for Park Lane – Deer Valley 58

Figure 3.65: Saturation Flow Counts for Bonanza Dr– Deer Valley 58

Figure 3.66: Saturation Flow Counts for Bonanza Dr– SR248 59

Figure 3.67: Saturation Flow Counts for Comstock Rd – SR248 59

LIST OF ACRONYMS

UTL	Utah Traffic Laboratory
UDOT	Utah Department of Transportation
ATCS	Adaptive Traffic Control System

1. INTRODUCTION

1.1 Background

Traffic signal systems that respond in real-time to changes in traffic patterns are known as "adaptive." adaptive traffic control systems (ATCSs) belong to the latest generation of signalized intersection control. ATCSs continuously detect vehicular traffic volume, compute "optimal" signal timings based on this detected volume and simultaneously implement them. Reacting to these volume variations generally results in reduced delays, shorter queues and decreased travel times.

The Utah Department of Transportation (UDOT) has been planning its first implementation of an ATCS in the state for the last three years. UDOT's first goal is to install an ATCS for a set of signal-controlled intersections at a specific location in Utah. The ATCS should provide system software with algorithmic intelligence, high reliability real-time detection, reliable communications between the system's components and the database for traffic data, timings, and system effectiveness. The second, but equally important, goal of the project is to deploy a system that meets or exceeds expectations to serve as a "showcase" for future installations.

ATCSs are designed to overcome the limitations of pre-timed control and respond to changes in traffic flow by adjusting signal timings in accordance with fluctuations in traffic demand. The purpose of this project is to deploy and evaluate the effectiveness of the future UDOT ATCS on an arterial street network that experiences both everyday and unpredictable changes in traffic flow.

1.2 Research on Adaptive Traffic Control at UTL

The University of Utah Traffic Laboratory (UTL) has a 10-year history of researching ATCSs through microscopic traffic simulation. The UTL research has focused on Split Cycle Offset Optimization Technique (SCOOT) adaptive traffic control, but has recently been extended to the Sydney Coordinated Adaptive Traffic System (SCATS). The UTL research on SCOOT's interfacing micro simulation software covers a variety of traffic conditions. Micro simulation packages (CORSIM and VISSIM) are connected to SCOOT, enabling a real-time interface between simulated traffic and adaptive control. Through our 10-year effort in ATCS research, we have modeled both real-world networks and corridors (Fort Union, E-Center, Downtown Salt Lake City, Bangerter Hwy, 400 South) and theoretical networks and corridors. We have applied a variety of traffic flows, ranging from regular diurnal traffic fluctuations to unpredictable event-based fluctuations. Other special conditions were also modeled, such as transit signal preemption and recovering from traffic incidents. The findings from each of these studies shows substantial benefits of adaptive traffic control over fixed-time systems. The ATCS performances were always compared to those of updated and optimal fixed-time systems. The ATCS benefits would have been even greater if the SCOOT results had been compared to actual timing plans. The comprehensive and rigorous nature of our research efforts, paired with continuous support from UDOT have made UTL recognized as an "Adaptive Control Traffic Lab." In recent months we have extended our research interests to other ATCSs by investigating the working principles of SCATS, OPAC, and RHODES.

1.3 Research Goal and Objectives

The project has two principal components: traffic measurements and institutional aspects. The goal of the traffic measurements is to assess the effectiveness of the future UDOT ATCS relative to the existing traffic control system. The goal of the institutional aspects is to assess the transfer of ATCS expertise from a vendor to UDOT personnel. The assessments should be conducted in such a way to respond to all the requirements stated in the UDOT request for proposal that the future ATCS should meet. The research objectives are:

- Define the traffic efficiency criteria that Utah's first ATCS should meet.
- Define Measures of Effectiveness (MOEs) to assess these criteria.
- Conduct "before and after" and "with and without" evaluations to assess ATCSs' effects on the efficiency of traffic flow.
- Assess operators' acceptance of ATCS technology.

1.3.1 Task Descriptions

1. Design an ATCS evaluation. Specify:
    a. What type of traffic data to collect
    b. Data collection procedures and technologies (manual, video, GPS, etc.)
    c. Data collection time periods (AM & PM peaks, off peak, weekends, special events)
    d. Data collection sample sizes
    e. Data reduction and analysis (formulae, statistical tests, etc.)
    f. Questionnaires for interviews with UDOT employees
2. Draft, submit, and acquire approval of a detailed evaluation design
3. Collect data before the ATCS is installed
4. Draft and submit an interim report
5. Observe and survey ATCS installation and early technology transfer
6. Collect data after the ATCS is installed
7. Observe and survey ATCS technology transfer through participation in both formal and informal training
8. Meet with UDOT's TAC and present findings
9. Draft and submit a final report

2. METHODOLOGY

Most ATCSs have the ability to turn off their adaptive controls and run traffic signal timings from the pre-stored fixed-time plans. This often gives evaluators the opportunity to perform "with and without" evaluations instead of "before and after" evaluations. A "with and without" evaluation essentially represents an assessment of the two operating modes within the same system. The "with and without" method can cause misleading results unless evaluators are completely sure that the "adaptive fixed-time" mode truly represents control conditions as they were before the ATCS was installed. The weakness of the "before and after" evaluation is that intersection design or signal phasing is often changed when a new control system is installed. If these changes occur, the "before and after" evaluation is weakened. For both of the evaluation methods, it is impossible to have identical traffic demands during data collection for "with ATCS" and "without ATCS" conditions. Therefore, some special statistical techniques will be applied to account for demand-dependent performance measures.

2.1 Criteria of Effectiveness

1. Delay and journey times will be no greater or measurably lower than those under the existing regime for non-event traffic conditions.
2. The onset of congestion will be delayed and the recovery from congestion will be earlier when compared to the performance of the existing regime.
3. With proper system maintenance, the system will age significantly slower than the existing fixed-time regime would (were it to continue).
4. With qualified instructors and proper materials for training, UDOT personnel will be able to acquire knowledge about the system, providing smooth transition in the operation and maintenance of the various equipment and components of the ATCS.

Evaluation of the system operation with and without adaptive traffic control will be undertaken in two ways:

- Field data measurements - comparisons of measured intersection delays and travel times for both control regimes
- Network simulation – evaluation of the system performance for various future traffic conditions

How to assess these criteria:

1. Measure and compare delay, journey times and other MOEs for peak and off-peak traffic conditions – field data collection
2. Evaluate system performance during transition periods (peak & off peak; off peak & peak) – traffic simulation
3. To assess "aging" - measure system adaptability to long-term traffic changes (5-year interval) and seasonal fluctuations (e.g. December traffic vs. July traffic) – traffic simulation
4. Interview UDOT personnel with respect to lessons learned immediately following completion of the ATCS installation; and after ATCS is in routine operation – personal interviews

2.2 Measures of Effectiveness

Table 2.1 shows MOEs that will be collected for the ATCS evaluation. Table 2.1 briefly describes each MOE, its data collection method, and its application range. The last column describes how each MOE contributes to the assessment.

Table 2.1 Proposed MOEs for ATCS Evaluation

MOE	Description	Method	Range	Assessment
Stopped Delay	Average stopped delay per vehicle (sec)	Manual collection	All intersections & approaches	Shows how much delay a signal produces
Corridor Travel Time	Journey time on the corridor (sec)	Floating car & GPS (or manual)	Main corridor	Shows system's ability to coordinate traffic
Average Speed	Average travel speed on the corridor segments (MPH)	Floating car & GPS (or manual)	All segments on the corridor	Shows total delay imposed by both traffic signals and current demand
Number of Stops	Average number of stops at intersection on corridors (#)	Floating car & GPS (or manual)	All corridors	Shows system's ability to coordinate traffic
Cycle Length	Time required for the signal to display a complete sequence of colors (sec)	Manual collection, controller data, or system data	All intersections	Shows system's ability to increase capacity/reduces delay for different demand levels
Traffic Demand	Actual traffic volumes (veh/interval)	Manual collection or video detection	All intersections & approaches	Necessary to distinguish between before and after studies

2.3 Data Collection Periods

The data collection during the weekday peak and off peak periods will be conducted on Tuesdays, Wednesdays, and Thursdays. All data collections will be conducted under fair weather and dry pavement conditions. The studies will be conducted during three weekday time periods: the AM peak (7 to 9 AM), the PM peak (4 to 6 PM), and the midday peak (11:30 AM to 1:30 PM). The data will also be collected on weekends, sometime between 11 AM and 3 PM (based on local weekend peak traffic conditions).

The data will also be collected for any special event that may happen during the project. In this way, ATCS's responsiveness will be assessed during high and unpredictable traffic flows.

Table 2.2 shows collection periods for each of the data collection efforts. The "x" represents data collection periods while the '–' represents no data collection.

Table 2.2 Data Collection Periods

	Weekday			Weekend/Special Event
	AM Peak	MD	PM Peak	Peak
	7-9 AM	12-2 PM	4-6 PM	2 hours
Controlled Delay Studies	x	x	x	x
Turning Movement Counts	x	x	x	x
Travel Time Runs	x	x	x	x
Automatic Counts	Continuously - several days			–

2.4 Stopped-Time Delay Studies

Stopped-time delay studies will be conducted to assess the influence of the ATCS system on stopped-time delay and stops at all 12 intersections. The stopped-time delay studies will be conducted by two observers according to the procedure specified in the 2000 Highway Capacity Manual. A series of five-minute studies of each lane group at the intersections will be conducted using some of the suggested sampling intervals (13-17 seconds). When a five-minute study of one lane group is completed, a five-minute study of another lane group will start until all lane groups at the intersection have been studied.

2.5 Travel Time/Delay Studies

The travel time/delay studies are conducted using the floating car technique as described in the ITE Manual of Transportation Engineering Studies. The test vehicle is driven according to the floating-car method in which the vehicle passes as many vehicles as those that pass the test vehicle. The study team consists of two persons if data is recorded manually. One person drives the test car while the other person measures travel times and delays with a stopwatch and records the measurements on a data collection form. The test car is driven in both directions on each street during the same time periods in which the stopped-time delay studies are conducted. Close to the same number of runs is made in the median and curb lanes. The numbers of required runs are calculated according to NCHRP Report 398 for suggested sample size for data collection on arterial streets.

$$Sample\ \ Size,\ \ n \cong \frac{z^2 \cdot c.v.^2}{e^2}$$

where

n = sample size for normal distribution
z = standard normal variation based on desired confidence level
c.v. = coefficient of variation of travel times (%), and
e = specified relative error (%), e.g. for ± 10% error, 30 ± 3 minutes.

Coefficient of variation is a key factor which influences the sample size. Coefficient of variation represents the variability of travel time data. To minimize the number of required runs, coefficients of variation were investigated for road segments with similar operating characteristics (*NCHRP, 1997)*. Two major stratifications were done for arterial streets based on hundreds of observations. The first stratification is based on signal density. The second stratification is based on ADT (average daily traffic) per lane group.

The UTL team recently obtained some test travel time data and volume counts. The length of the route, from the intersection of Interstate 80 and SR 224 and the intersection of SR 224 and Comstock Drive, is about 7.35 miles. There are 12 signalized intersections on the route, fewer than two signals per mile. With this signal density, the route belongs to the low signal density stratum group (*NCHRP, 1997)* which has an 85th percentile c.v. of 13.2 percent.

Traffic volume data collected recently at the Bear Hollow and SR 224 intersections show around 1300 vehicles per hour in the peak direction during the peak hour. By converting this number to daily traffic volume (using a peak conversion factor of approximately 10 percent), we get around 6500 ADT per lane on the route. This moderate traffic volume places the route in moderate ADT per lane stratum group (*NCHRP, 1997)*. This stratum group yields to 19.3 percent of the 85th percentile of c.v.

To be on the safe side, we decided to use the higher value for c.v. (the one that comes from ADT per lane stratification). With a 95 percent level of confidence and 10 percent of allowable error, we get the number of required runs:

$$Sample\ \ Size,\ \ n \cong \frac{z^2 \cdot c.v.^2}{e^2} = \frac{1.96^2 \cdot 19.3^2}{10^2} = \frac{3.84 \cdot 372.49}{100} = 14.3 \approx 15\ runs$$

Therefore, runs on the route will be recorded 15 times for each of the data collection periods to obtain a representative data sample of the travel times.

2.6 Automatic Traffic Volume Counts

Automatic traffic counts will be obtained at three locations along SR 224 and SR 248. The counts will be collected on all days (24-hours) when the travel time runs are recorded. These data will allow us to capture day-to-day traffic fluctuations. The data will also allow us to properly analyze travel time runs. For example, it would be wrong to compare travel time runs from the same traffic peak periods if the volumes (when the runs were recorded) are significantly different. Therefore, the travel time runs will be recorded at the same time the counts are taken so we can plot travel times (and delays) against traffic demand recorded at the same time.

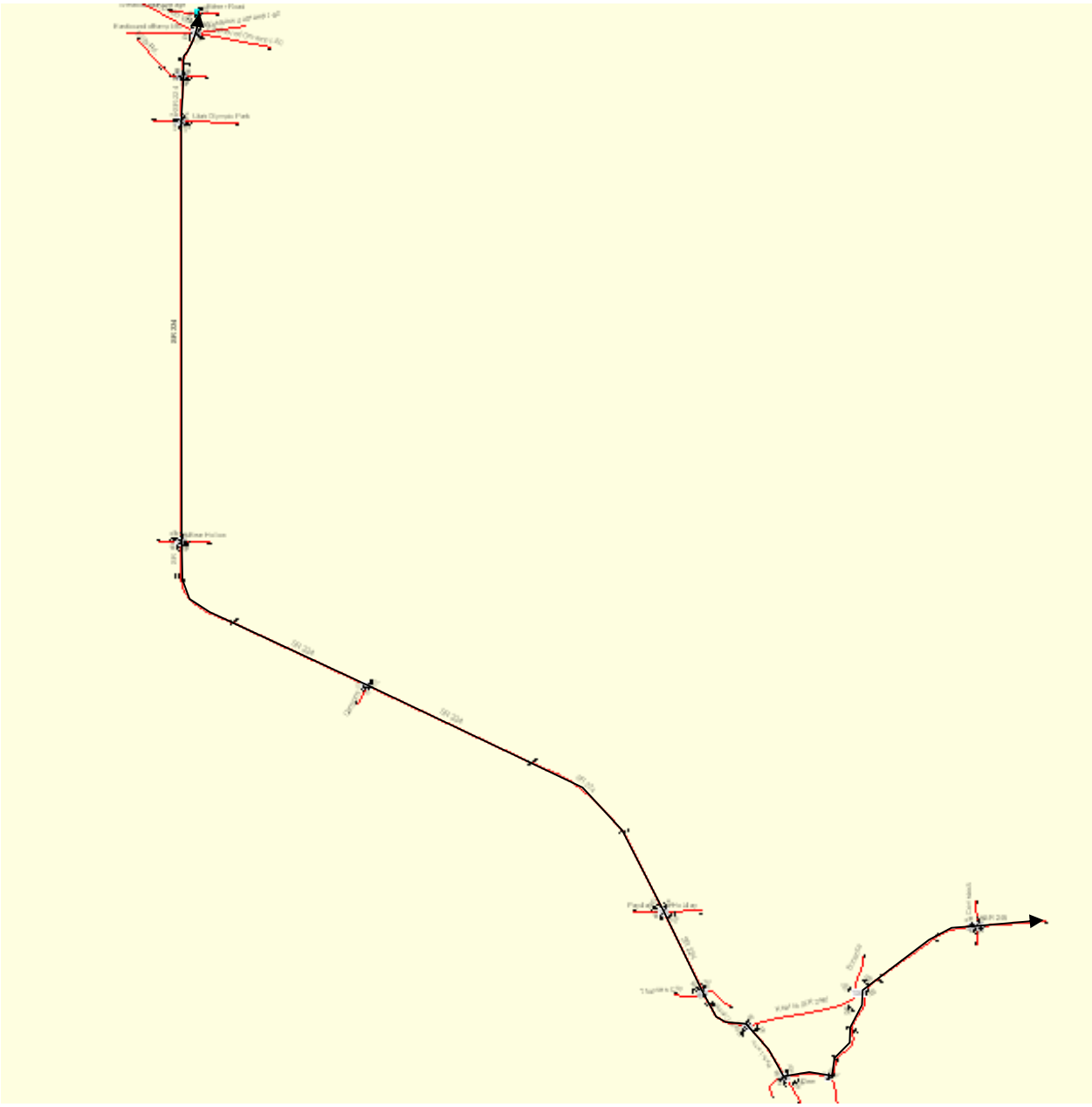

Figure 2.1 Travel time run – from Kimball Junction to Comstock Road

2.7 Turning Movement Counts

Turning movement counts will be collected at all 12 intersections in Park City, for all data collection periods. These counts will be used to relate relevant stopped delay studies with concurrent traffic demand at the intersections. They will also be used as inputs for traffic simulation runs. Traffic data collected during the project will be compared with previously collected data (by UDOT). Findings from this comparison will help us to develop factors and standard deviations for modeling traffic variability for simulation. Figure 2.2 shows an example of the turning movement counts taken from a SYNCHRO file.

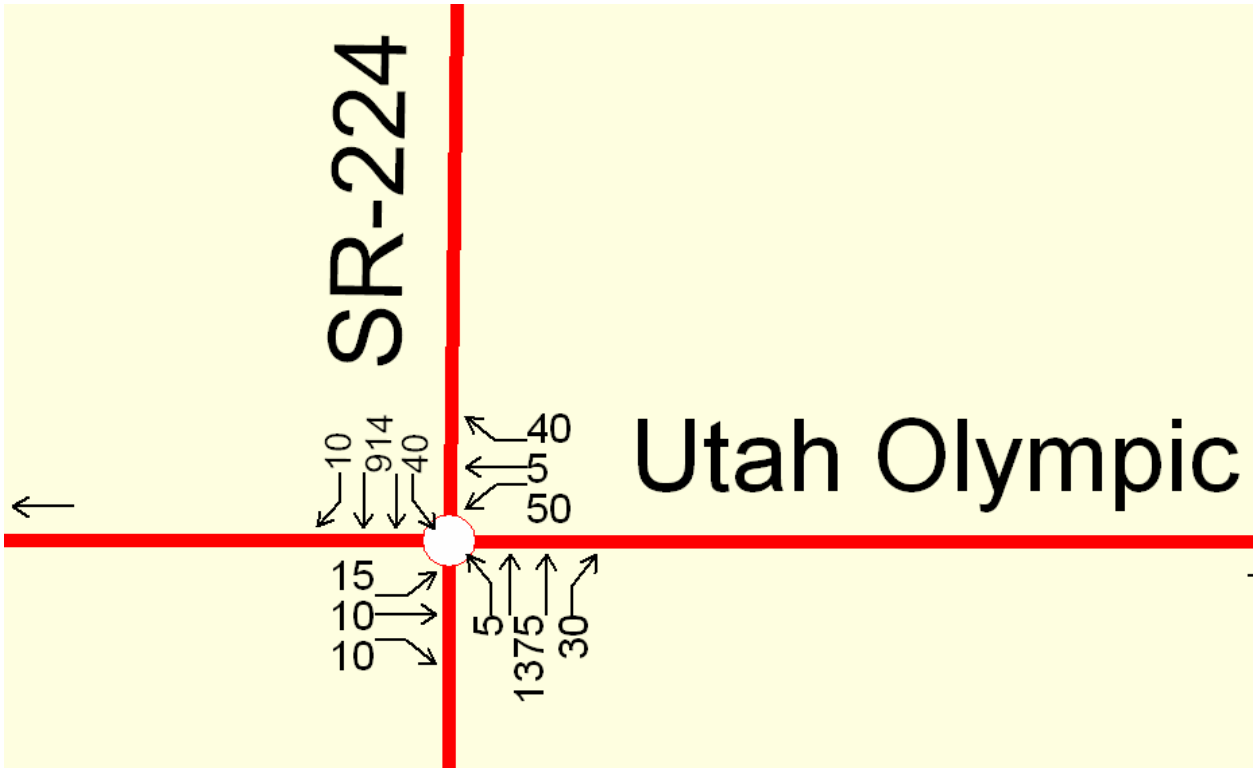

Figure 2.2 Turning movement counts – An extract from SYNCHRO file

2.8 Statistical Data Analysis

All demand-dependent performance measures will need to be statistically processed before any further analysis. For example, comparison of the mean delays and stops for before and after studies would be misleading because they are demand-dependent. Thus, any change in the traffic operations could be the consequence of various combinations of signal control effectiveness and changes in traffic demand. Therefore, the mean values of stopped-time delays and percent stops will be compared using an analysis of covariance (ANCOVA). The ANCOVA will account for the effect of the differences between the before and after study traffic demands. The ANCOVA of these variables will be conducted for each lane group at the 95 percent level of confidence.

For other, non demand-dependent MOEs, the mean values of the before and after study will be compared, and the statistically significant differences will be identified using the other statistical tests (e.g. t-test, Fisher's Least Square Difference Test) conducted at the 95 percent level of confidence. These tests will

help us to identify statistically significant differences in MOEs for before and after studies. However, the end users (UDOT) will get the results of these tests in user digest forms. The results will be presented in their original statistical formats. Extensive explanations will interpret the meaning of the statistical analyses. The project's findings will be summarized in a form suitable for quick comprehension and dissemination to senior management.

2.9 Project Time Plan

Figure 2.3 shows the time plan for completion of the ATCS evaluation. The figure shows completion times for both the existing project (ATCS IV) and the proposed continuation of the evaluation (ATCS V).

ID	Task Name	Start	Finish	Duration
1	"Before" Data Collection	4/4/2005	7/1/2005	13w
2	Build VISSIM network from SYNCHRO	2/1/2005	6/1/2005	17.4w
3	Writing Interim Report	5/2/2005	7/1/2005	9w
4	Installation and Field Work	8/2/2005	12/29/2005	21.6w
5	Writing Final Report - Before	9/1/2005	12/1/2005	13.2w
6	Technology Transfer	8/2/2005	3/31/2006	34.8w
7	"After" & "Without" Data Collection	3/1/2006	5/30/2006	13w
8	Hook up SCATSIM & VISSIM	12/1/2005	3/3/2006	13.4w
9	Model Traffic Variability & Run Simulations	3/1/2006	5/1/2006	8.8w
10	Data Analysis	8/1/2005	8/1/2006	52.4w
11	Writing Final Report - Before & After	2/1/2006	6/30/2006	21.6w

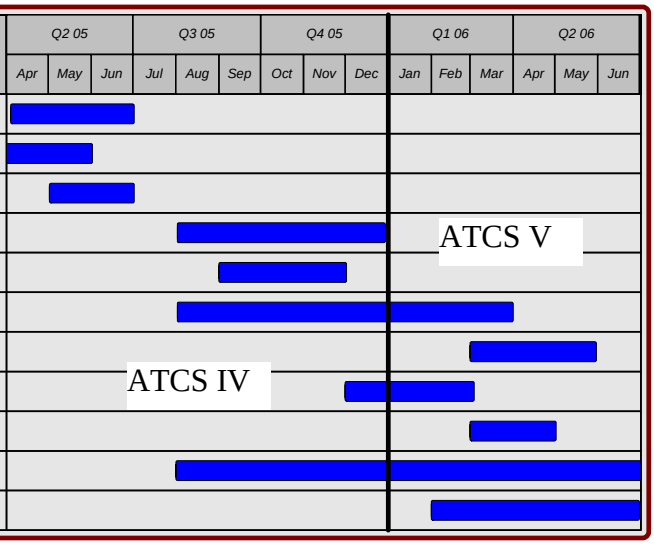

Figure 2.3 Project Completion Time Plan

3. RESULTS

3.1 Before Study

The results presented in the next sections represent the measurements from the traffic data collection before the ATCS is installed. The data collection was done during three weeks in August before the start of the school season in Park City.

3.1.1 Stopped Delay

The data for stopped delay were collected with a cycle length of 16 seconds according to the process explained earlier in the text. The results for each intersection are presented both on the graph and in the corresponding table. Approach volumes (stopped and through) are given as a weighted average of all collected data for that particular direction based on the recorded number of vehicles. Total delay is given in seconds. The next two columns give the average delay for a vehicle that had to stop at the intersection and the average delay of all approaching vehicles. The last column gives the percentage of all approaching vehicles that had to stop at the intersection. The graph shows average delay per stopped vehicle as a function of direction and time of day.

Table 3.1 Average stopped delays per vehicle at the Kimball Junction intersection

Direction	Left or Trough	Time of Day	Approach Volume - Stopped	Approach Volume - Through	Approach Volume - Total	Total Delay (sec)	Average Delay per Stopped vehicle (sec)	Average Delay per Approach vehicle (sec)	Percent of Vehicles Stopped
			(1)	*(2)*	*(3)=(1)+(2)*	*(4)*	*(5)=(4)/(1)*	*(6)=(4)/(3)*	*(7)=(1)/(3)%*
EB	**L**	*AM*	17	3	20	576	34	29	85.00%
		MD	4	0	4	272	68	68	100.00%
		PM	12	0	12	736	61	61	100.00%
	R	*AM*	153	132	285	1567	10	5	53.68%
		MD	67	96	163	912	14	6	41.10%
		PM	120	154	274	2257	19	8	43.80%
NB	**L**	*AM*	96	73	169	2904	30	17	56.80%
		MD	77	123	200	2210	29	11	38.50%
		PM	77	232	309	1995	26	6	24.92%
	T	*AM*	11	15	26	96	9	4	42.31%
		MD	3	15	18	48	16	3	16.67%
		PM	5	18	23	160	32	7	21.74%
SB	**L**	*AM*	4	1	5	176	44	35	80.00%
		MD	4	0	4	264	66	66	100.00%
		PM	11	2	13	960	87	74	84.62%
	T	*AM*	17	0	17	840	49	49	100.00%
		MD	29	2	31	1652	57	53	93.55%
		PM	29	0	29	1721	59	59	100.00%
WB	**L**	*AM*	67	15	82	2880	43	35	81.71%
		MD	54	7	61	3698	68	61	88.52%
		PM	48	6	54	2554	53	47	88.89%

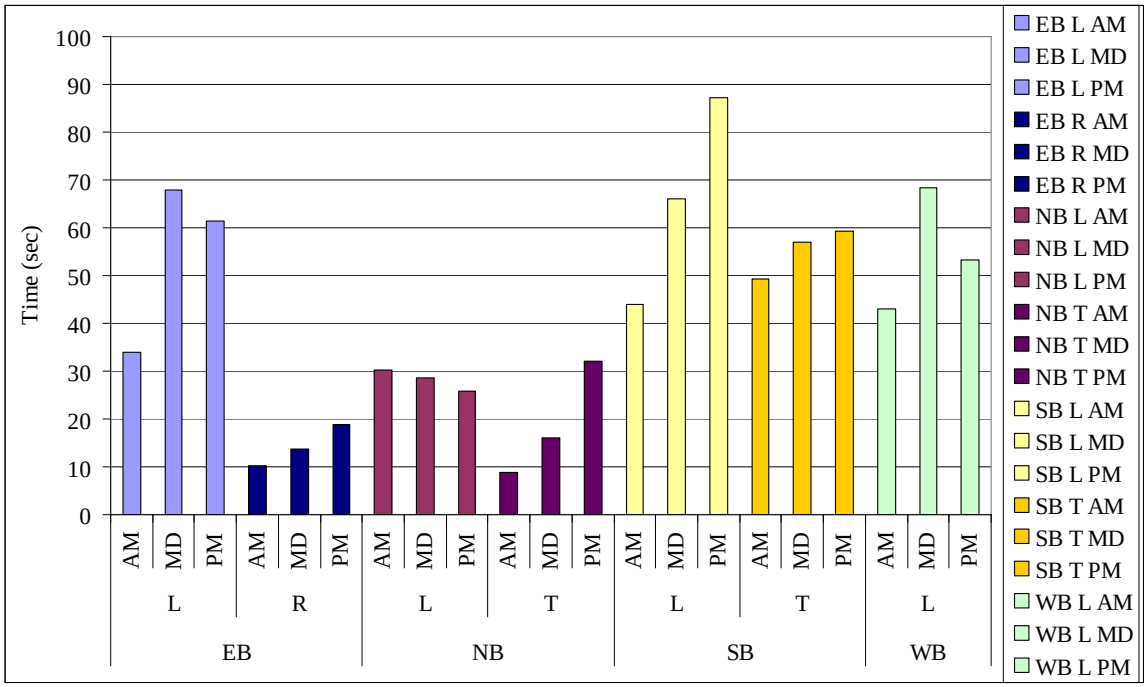

Figure 3.1 Average stopped delays by time of day and direction at the Kimball Junction intersection

Table 2.2 Average stopped delays per vehicle at the intersection of SR224 and Landmark Dr

Direction	Left or Trough	Time of Day	Approach Volume - Stopped	Approach Volume - Through	Approach Volume - Total	Total Delay (sec)	Average Delay per Stopped vehicle (sec)	Average Delay per Approach vehicle (sec)	Percent of Vehicles Stopped
			(1)	*(2)*	*(3)=(1)+(2)*	*(4)*	*(5)=(4)/(1)*	*(6)=(4)/(3)*	*(7)=(1)/(3)%*
EB	L	*AM*	13	2	15	640	49	43	86.67%
		MD	14	0	14	538	38	38	100.00%
		PM	36	0	36	2365	66	66	100.00%
	T	*AM*	9	0	9	304	34	34	100.00%
		MD	18	1	19	1009	56	53	94.74%
		PM	21	3	24	1096	52	46	87.50%
NB	L	*AM*	25	0	25	1104	44	44	100.00%
		MD	37	1	38	1839	50	48	97.37%
		PM	54	5	59	2743	51	46	91.53%
	T	*AM*	34	40	74	1249	37	17	45.95%
		MD	34	32	66	1813	53	27	51.52%
		PM	47	45	92	2067	44	22	51.09%
SB	L	*AM*	14	2	16	259	19	16	87.50%
		MD	20	3	23	510	25	22	86.96%
		PM	35	2	37	1586	45	43	94.59%
	T	*AM*	29	53	82	605	21	7	35.37%
		MD	56	24	80	2059	37	26	70.00%
		PM	51	24	75	2155	42	29	68.00%
WB	L	*AM*	3	0	3	88	29	29	100.00%
		MD	23	0	23	912	40	40	100.00%
		PM	4	1	5	233	58	47	80.00%
	T	*AM*	8	0	8	339	42	42	100.00%
		MD	21	2	23	1097	52	48	91.30%
		PM	15	4	19	1023	68	54	78.95%

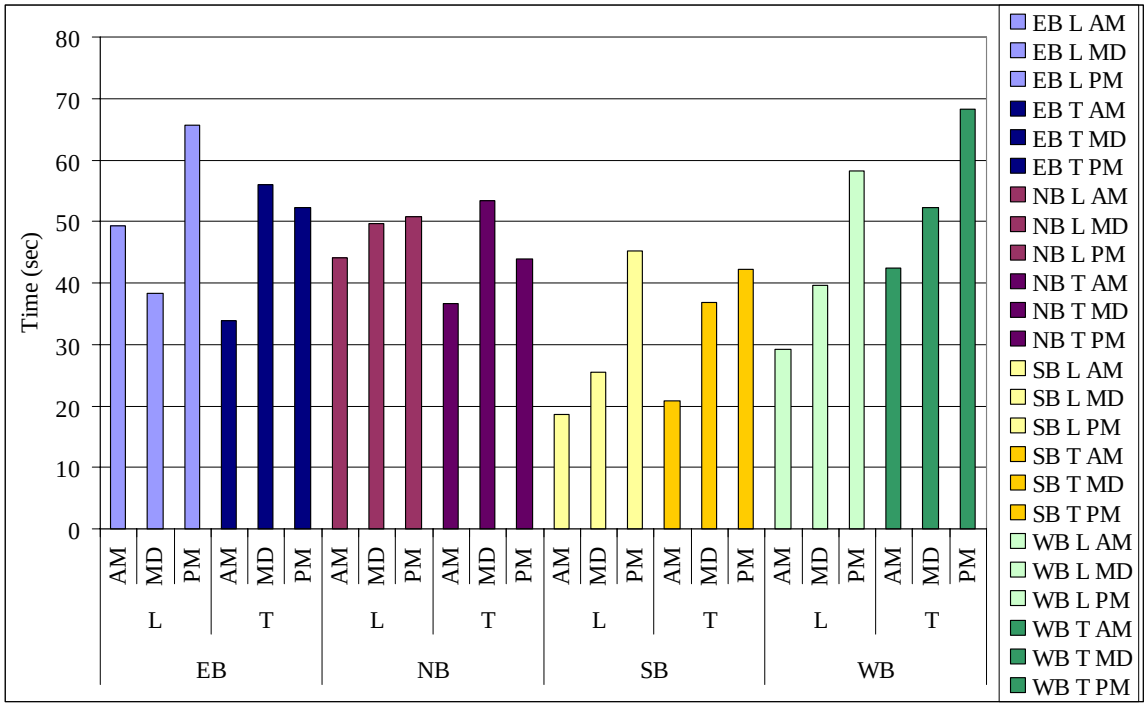

Figure 3.2 Average stopped delays by time of day and direction at the intersection of SR224 and Landmark Dr

Table 3.3 Average stopped delays per vehicle at the intersection of Park Lane and SR248

Direction	Left or Trough	Time of Day	Approach Volume - Stopped	Approach Volume - Through	Approach Volume - Total	Total Delay (sec)	Average Delay per Stopped vehicle (sec)	Average Delay per Approach vehicle (sec)	Percent of Vehicles Stopped
			(1)	*(2)*	*(3)=(1)+(2)*	*(4)*	*(5)=(4)/(1)*	*(6)=(4)/(3)*	*(7)=(1)/(3)%*
NB	**T**	*AM*	30	47	77	517	17	7	38.96%
		MD	46	72	118	1332	29	11	38.98%
		PM	65	66	131	2479	38	19	49.62%
SB	**L**	*AM*	91	10	101	4262	47	42	90.10%
		MD	50	8	58	1211	24	21	86.21%
		PM	72	11	83	2573	36	31	86.75%
	T	*AM*	32	72	104	402	13	4	30.77%
		MD	40	64	104	676	17	7	38.46%
		PM	18	87	105	336	19	3	17.14%
WB	**L**	*AM*	15	2	17	437	29	26	88.24%
		MD	22	2	24	1237	56	52	91.67%
		PM	20	3	23	811	41	35	86.96%

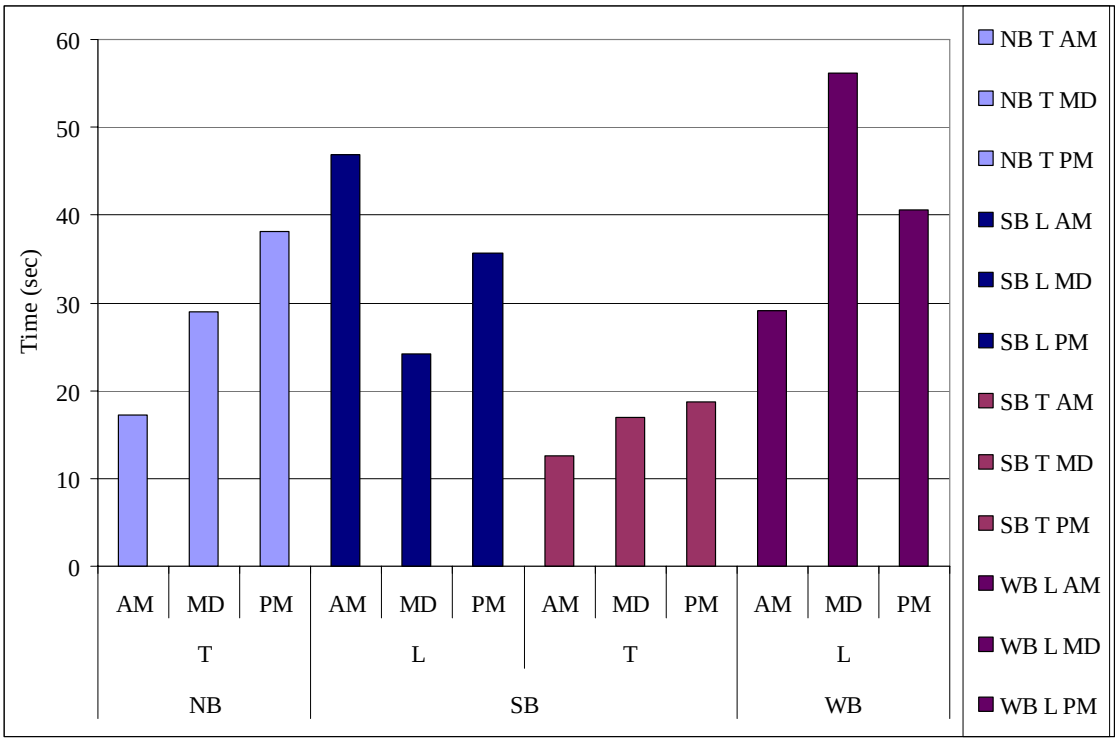

Figure 3.3 Average stopped delays by time of day and direction at the intersection of Park Lane and SR248

Table 3.4: Average stopped delays per vehicle at the intersection of Park Lane and Deer Valley

Direction	Left or Trough	Time of Day	Approach Volume - Stopped	Approach Volume - Through	Approach Volume - Total	Total Delay (sec)	Average Delay per Stopped vehicle (sec)	Average Delay per Approach vehicle (sec)	Percent of Vehicles Stopped
			(1)	*(2)*	*(3)=(1)+(2)*	*(4)*	*(5)=(4)/(1)*	*(6)=(4)/(3)*	*(7)=(1)/(3)%*
EB	L	*AM*	8	0	8	272	34	34	100.00%
		MD	10	2	12	468	47	39	83.33%
		PM	19	2	21	776	41	37	90.48%
	T	*AM*	3	0	3	96	32	32	100.00%
		MD	4	0	4	135	34	34	100.00%
		PM	10	2	12	517	52	43	83.33%
NB	L	*AM*	1	1	2	0	0	0	50.00%
		MD	1	0	1	16	16	16	100.00%
		PM	4	0	4	88	22	22	100.00%
	T	*AM*	10	3	13	224	22	17	76.92%
		MD	17	12	29	624	37	22	58.62%
		PM	20	15	35	618	31	18	57.14%
SB	L	*AM*	20	7	27	468	23	17	74.07%
		MD	23	7	30	526	23	18	76.67%
		PM	28	10	38	610	22	16	73.68%
	T	*AM*	5	10	15	91	18	6	33.33%
		MD	14	10	24	256	18	11	58.33%
		PM	13	12	25	315	24	13	52.00%
WB	L	*AM*	3	0	3	40	13	13	100.00%
		MD	9	0	9	458	51	51	100.00%
		PM	5	0	5	161	32	32	100.00%
	T	*AM*	3	0	3	72	24	24	100.00%
		MD	6	1	7	176	29	25	85.71%
		PM	4	0	4	112	28	28	100.00%

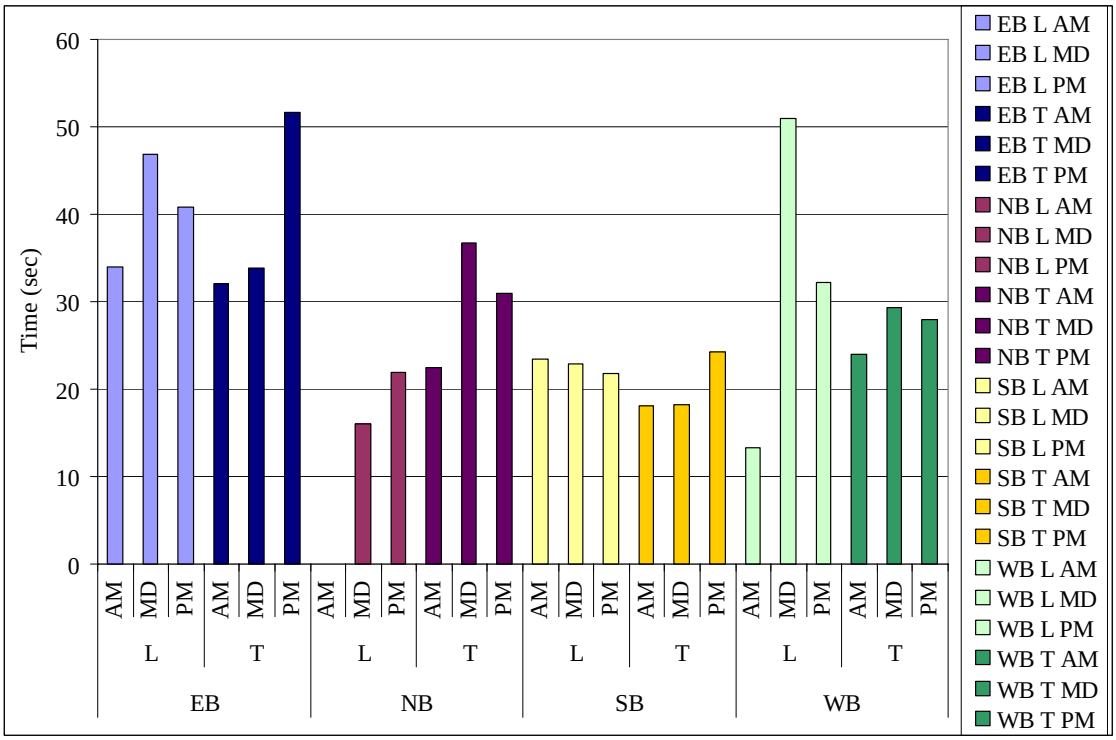

Figure 3.4 Average stopped delays by time of day and direction at the intersection of Park Lane and Deer Valley

Table 3.5 Average stopped delays per vehicle at the intersection of Bonanza Dr and SR248

Direction	Left or Trough	Time of Day	Approach Volume - Stopped	Approach Volume - Through	Approach Volume - Total	Total Delay (sec)	Average Delay per Stopped vehicle (sec)	Average Delay per Approach vehicle (sec)	Percent of Vehicles Stopped
			(1)	*(2)*	*(3)=(1)+(2)*	*(4)*	*(5)=(4)/(1)*	*(6)=(4)/(3)*	*(7)=(1)/(3)%*
EB	L	*AM*	8	1	9	192	24	21	88.89%
		MD	12	1	13	432	36	33	92.31%
		PM	8	2	10	247	31	25	80.00%
	T	*AM*	30	17	47	553	18	12	63.83%
		MD	18	18	36	755	42	21	50.00%
		PM	30	15	45	1145	38	25	66.67%
NB	L	*AM*	5	3	8	96	19	12	62.50%
		MD	23	8	31	666	29	21	74.19%
		PM	20	2	22	771	39	35	90.91%
	T	*AM*	4	1	5	65	16	13	80.00%
		MD	6	4	10	195	32	19	60.00%
		PM	10	7	17	296	30	17	58.82%
SB	L	*AM*	7	2	9	192	27	21	77.78%
		MD	11	1	12	309	28	26	91.67%
		PM	9	1	10	416	46	42	90.00%
	T	*AM*	13	1	14	360	28	26	92.86%
		MD	11	5	16	387	35	24	68.75%
		PM	10	2	12	445	45	37	83.33%
WB	L	*AM*	28	5	33	725	26	22	84.85%
		MD	43	2	45	2047	48	45	95.56%
		PM	19	3	22	578	30	26	86.36%
	T	*AM*	21	23	44	563	27	13	47.73%
		MD	14	19	33	371	26	11	42.42%
		PM	12	23	35	204	17	6	34.29%

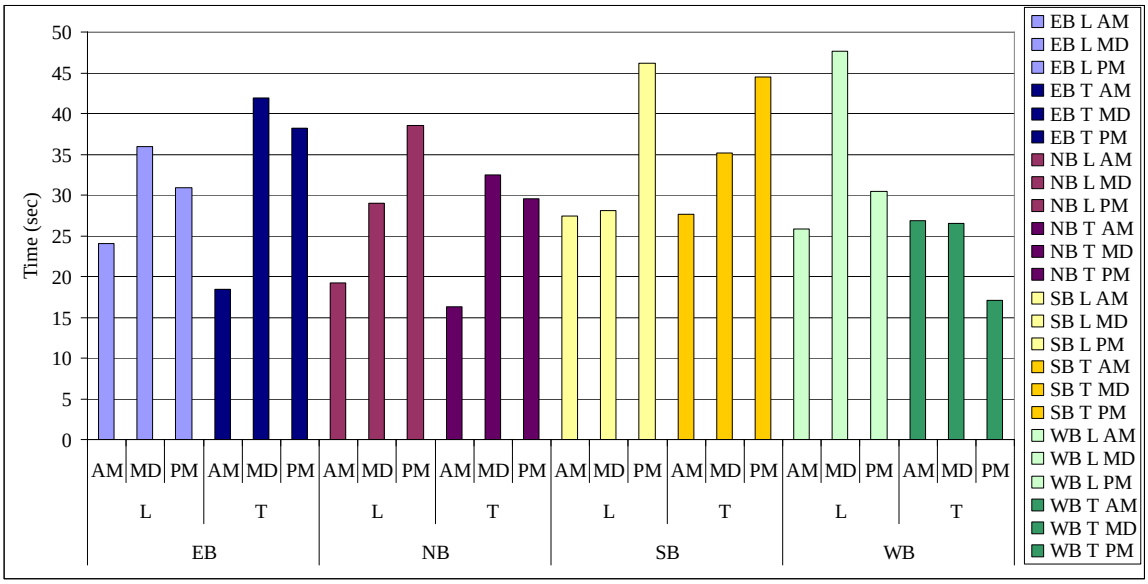

Figure 3.5 Average stopped delays by time of day and direction at the intersection of Bonanza Dr and SR248

3.1.2 Corridor Travel Time

The data for the corridor travel time study were collected according to the process explained in section 2.5. The first set of graphs represents travel time in seconds as a function of time of day for three peak periods (morning, noon, afternoon). The graphs show how long one can expect to travel in one direction depending on the time the journey is started. The distribution of travel times are presented in the second set of graphs. Each histogram is accompanied with mean and standard deviation.

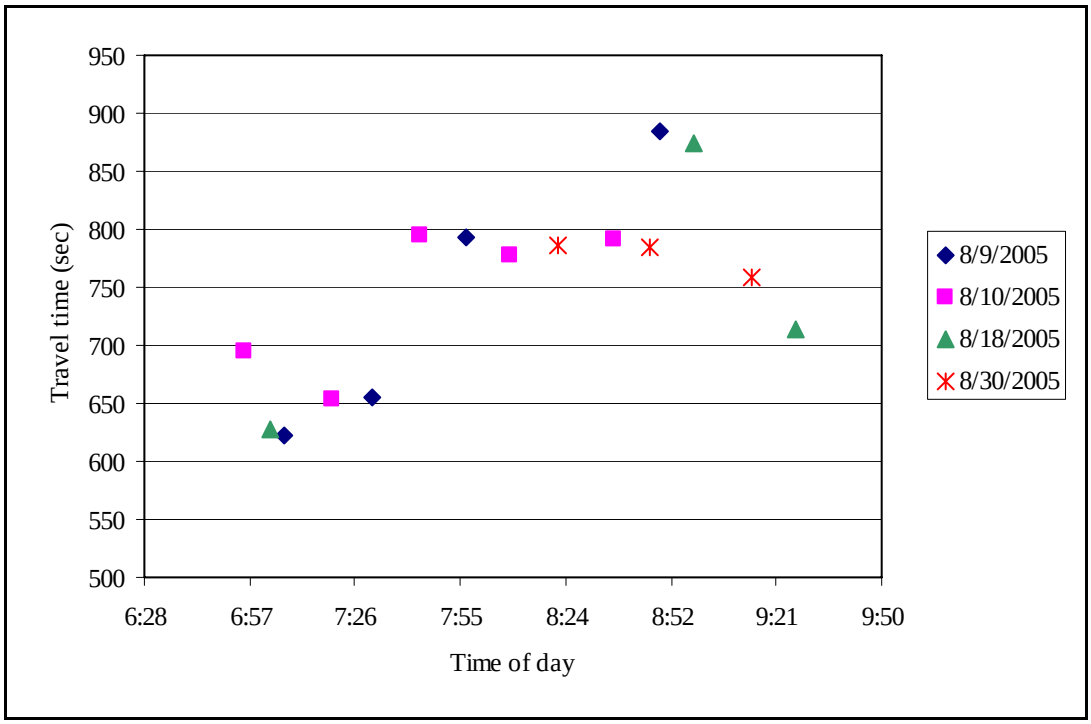

Figure 3.6: Travel time from Bitner Rd to Comstock Rd AM

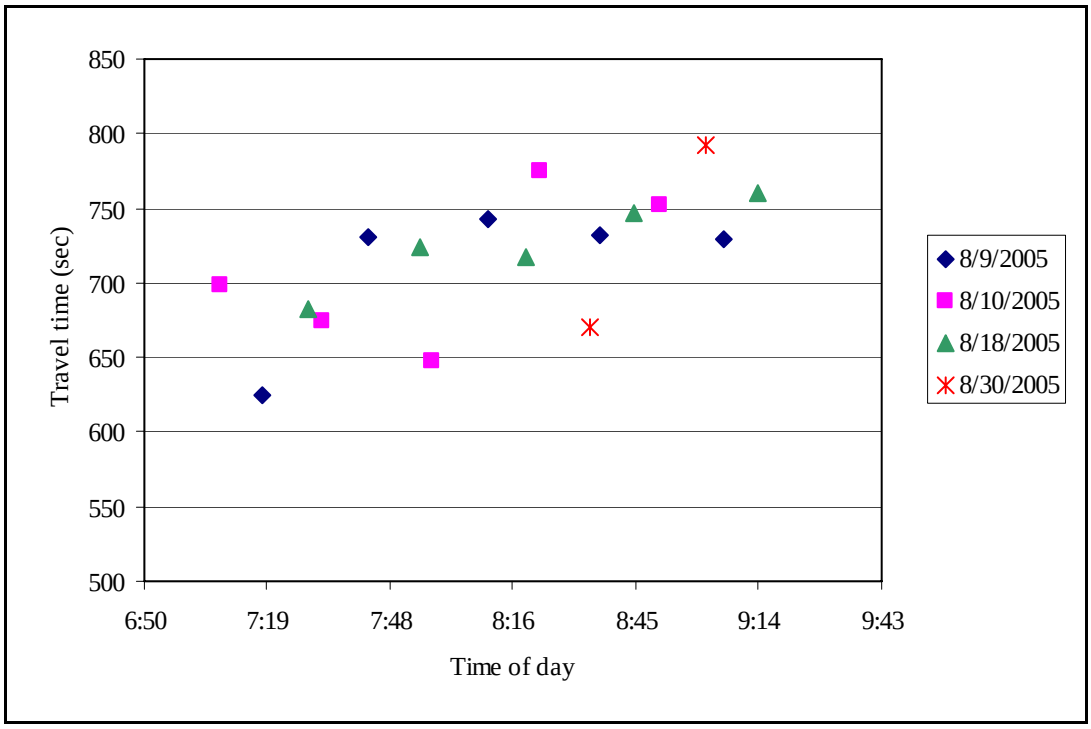

Figure 3.7: Travel time from Comstock Rd to Bitner Rd AM

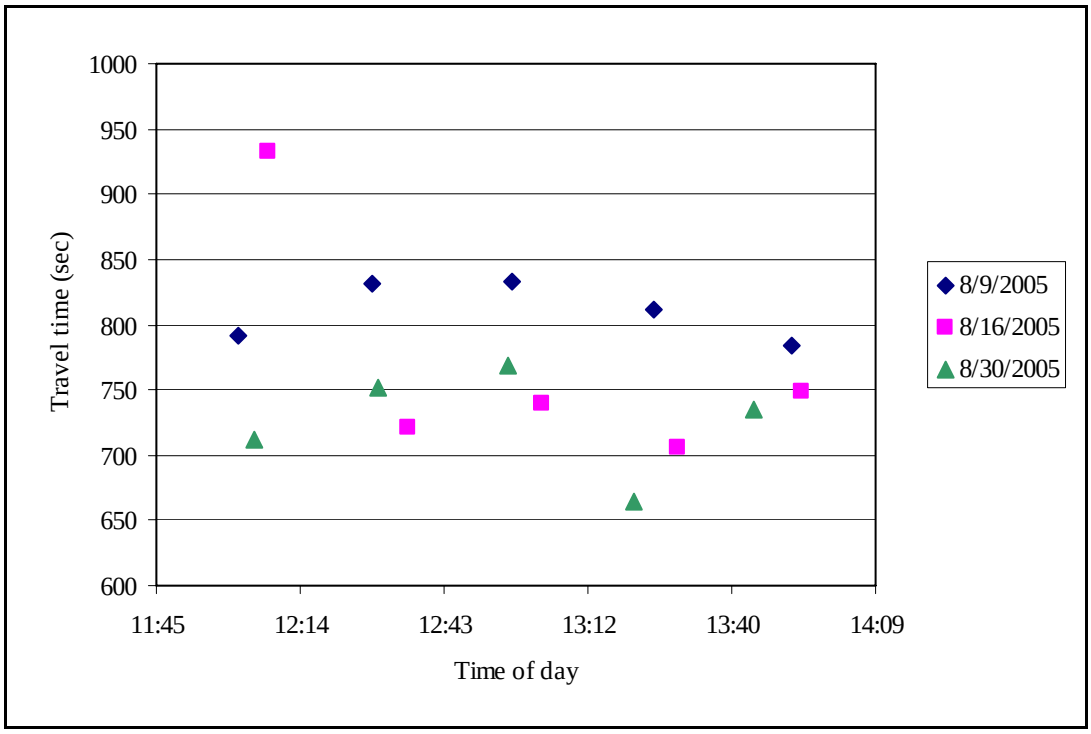

Figure 3.8: Travel time from Bitner Rd to Comstock Rd MD

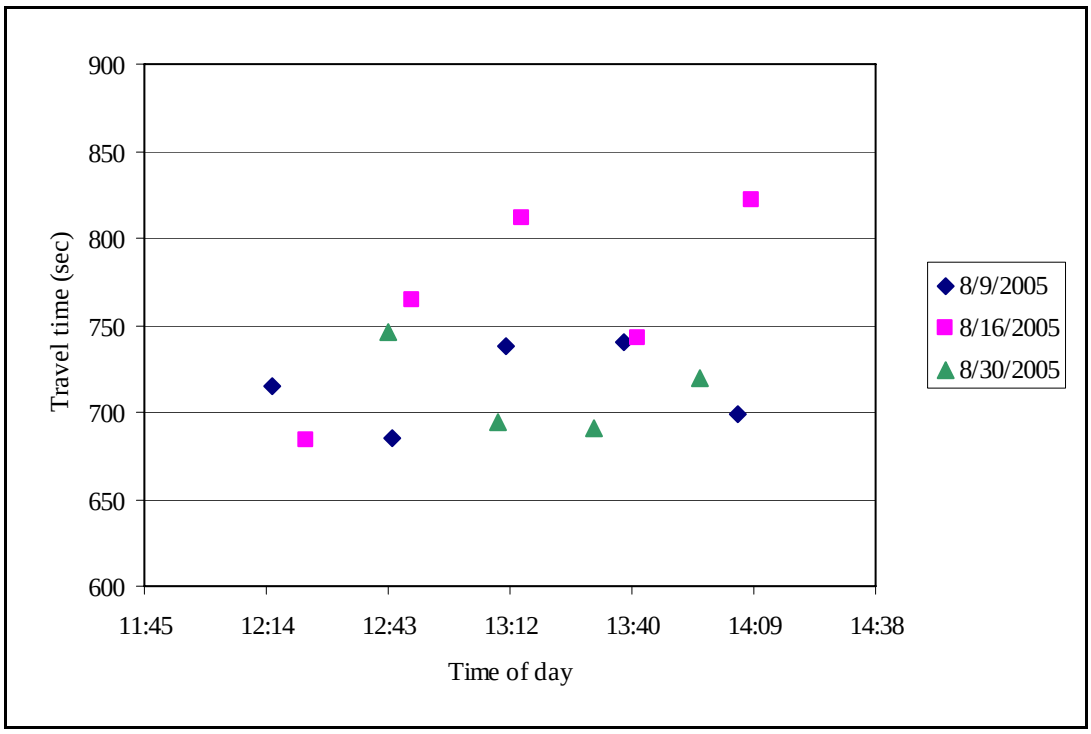

Figure 3.9: Travel time from Comstock Rd to Bitner Rd MD

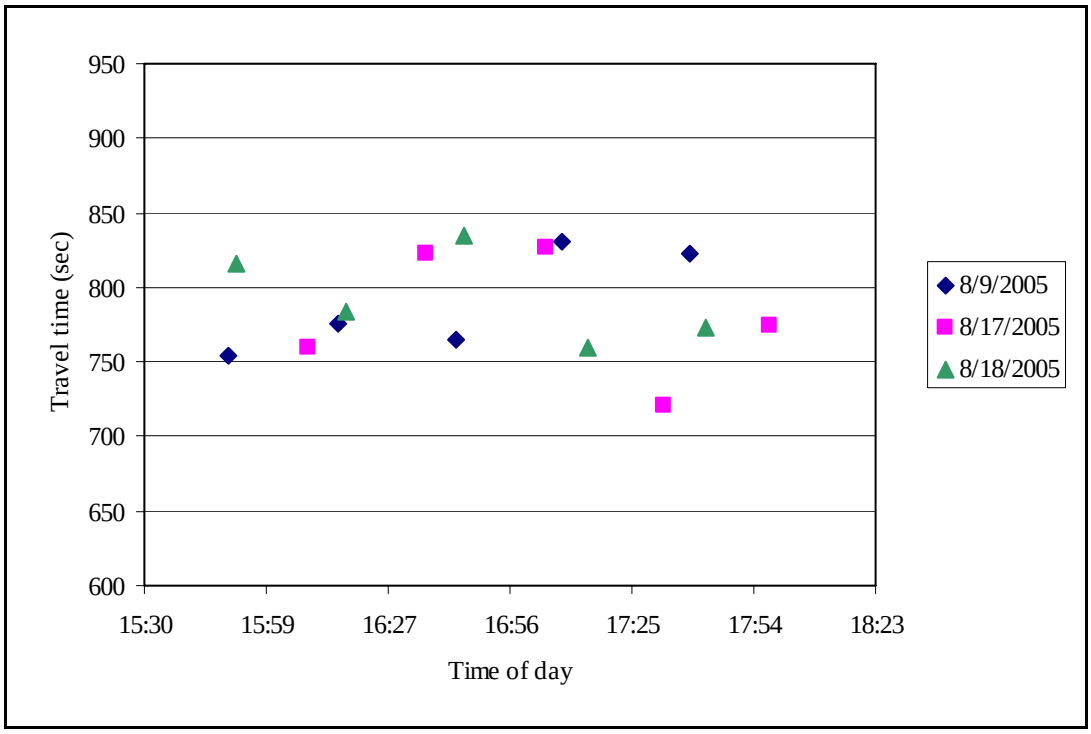

Figure 3.10: Travel time from Bitner Rd to Comstock Rd PM

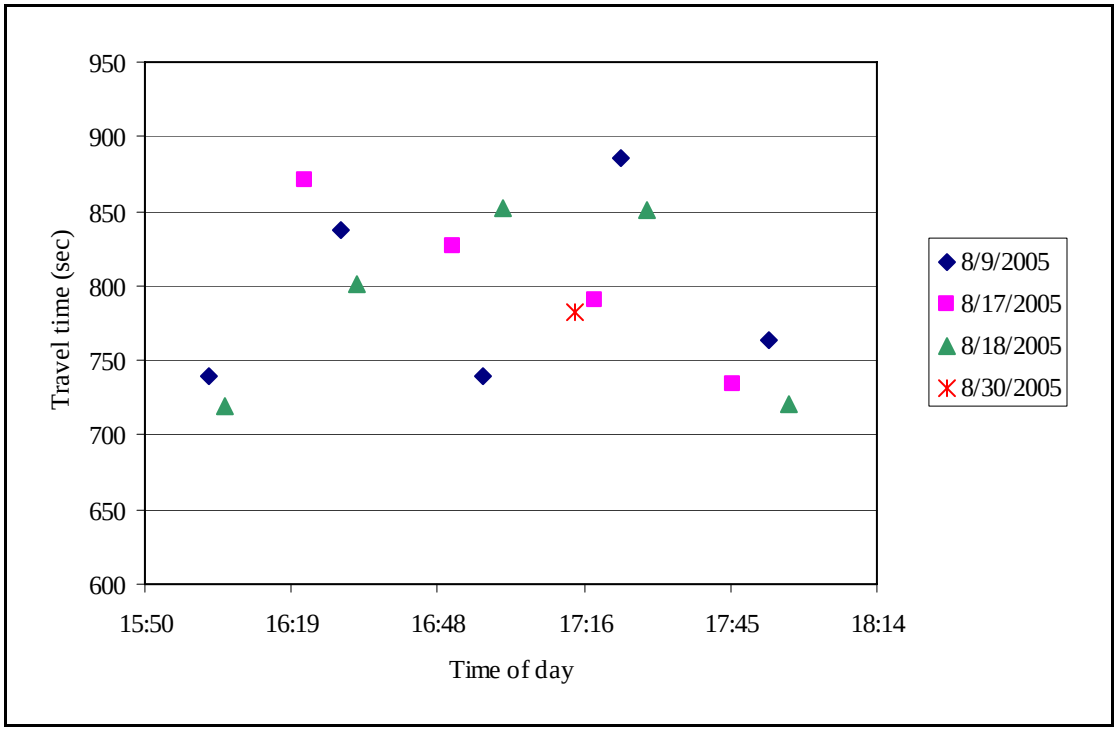

Figure 3.11: Travel time from Comstock Rd to Bitner Rd PM

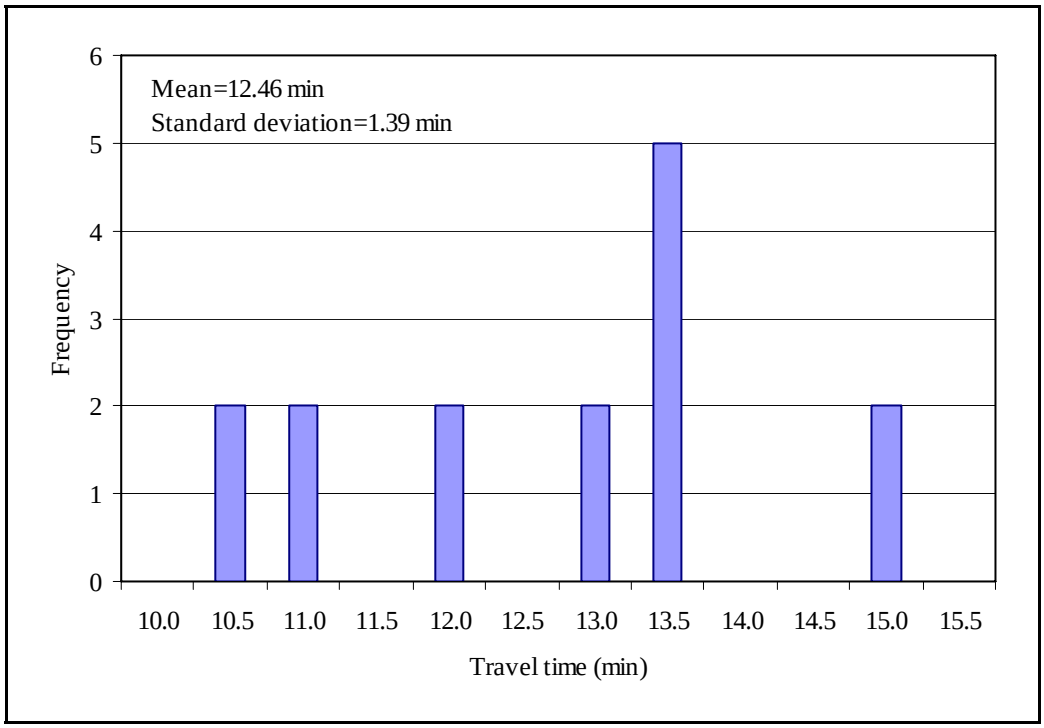

Figure 3.12: Histogram of travel times from Bitner Rd to Comstock Rd AM

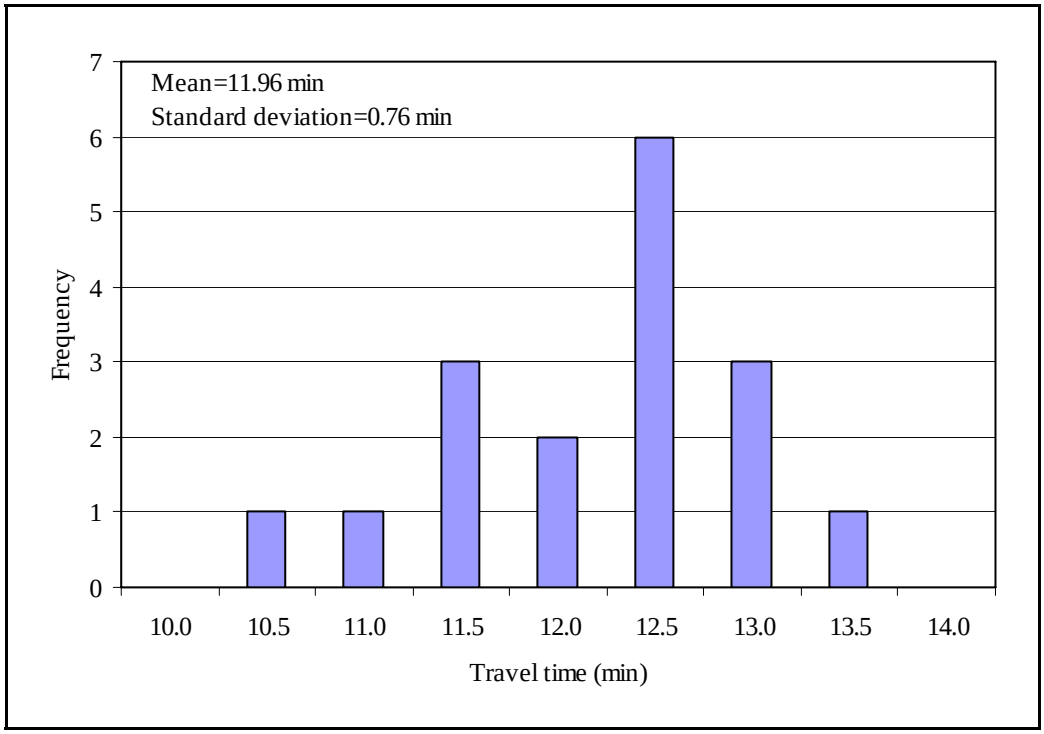

Figure 3.13: Histogram of travel times from Comstock Rd to Bitner Rd AM

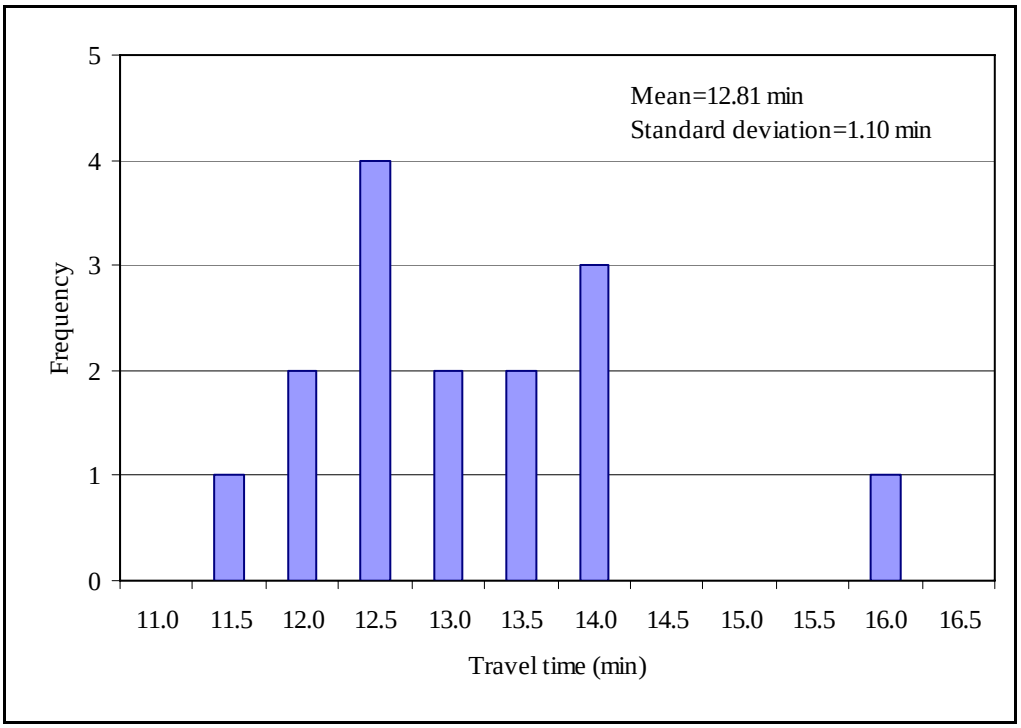

Figure 3.14: Histogram of travel times from Bitner Rd to Comstock Rd MD

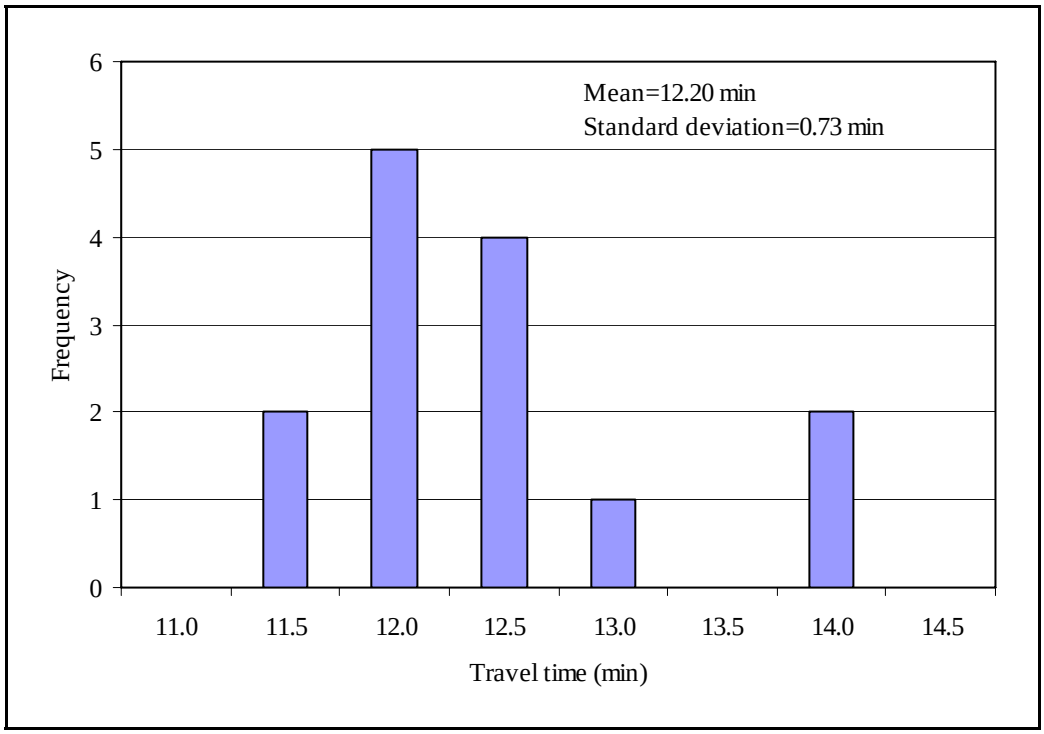

Figure 3.15: Histogram of travel times from Comstock Rd to Bitner Rd MD

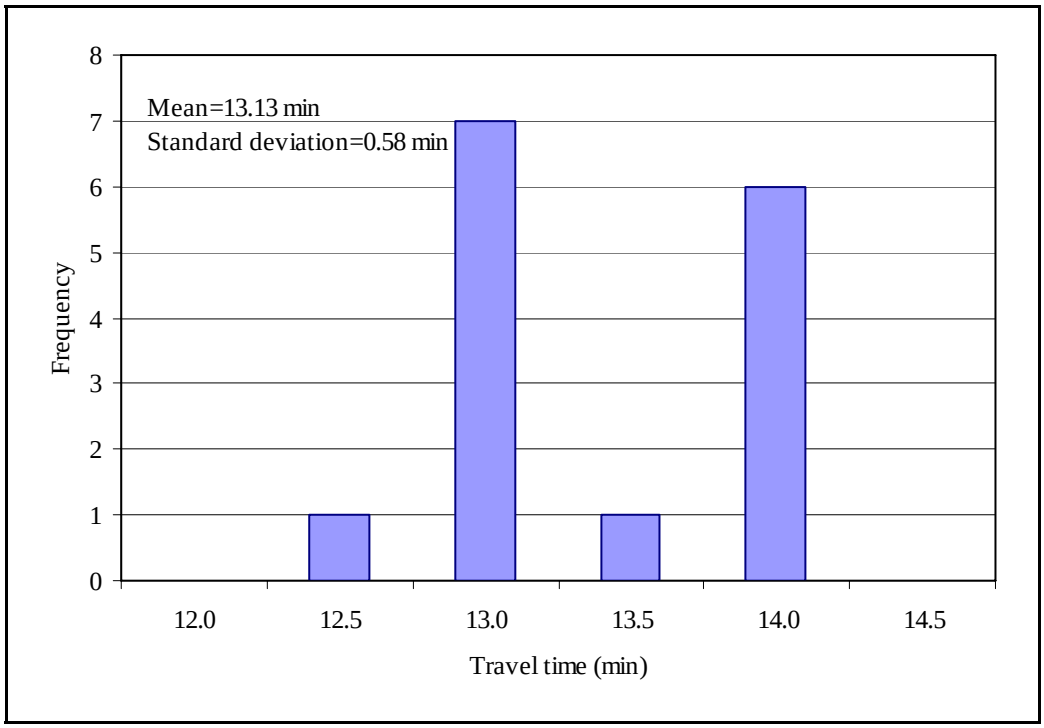

Figure 3.16: Histogram of travel times from Bitner Rd to Comstock Rd PM

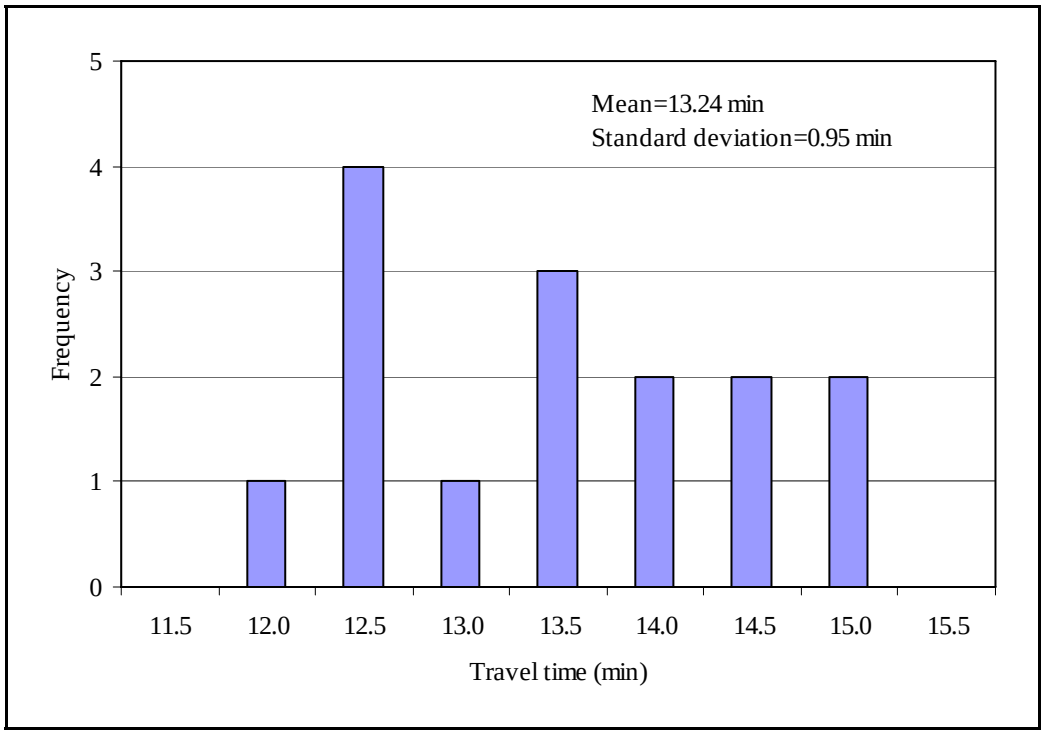

Figure 3.17: Histogram of travel times from Comstock Rd to Bitner Rd PM

3.1.3 Total Delay

The data for the total delay study were collected according to the process explained in section 2.5. The first set of graphs represents total delay in seconds as a function of time of day for the three diurnal periods (morning, noon, afternoon). The graphs show how long one can expect to be delayed in one direction depending on what time the journey is started. The distribution of total delays is presented in the second set of graphs. Each histogram is accompanied with corresponding mean and standard deviation.

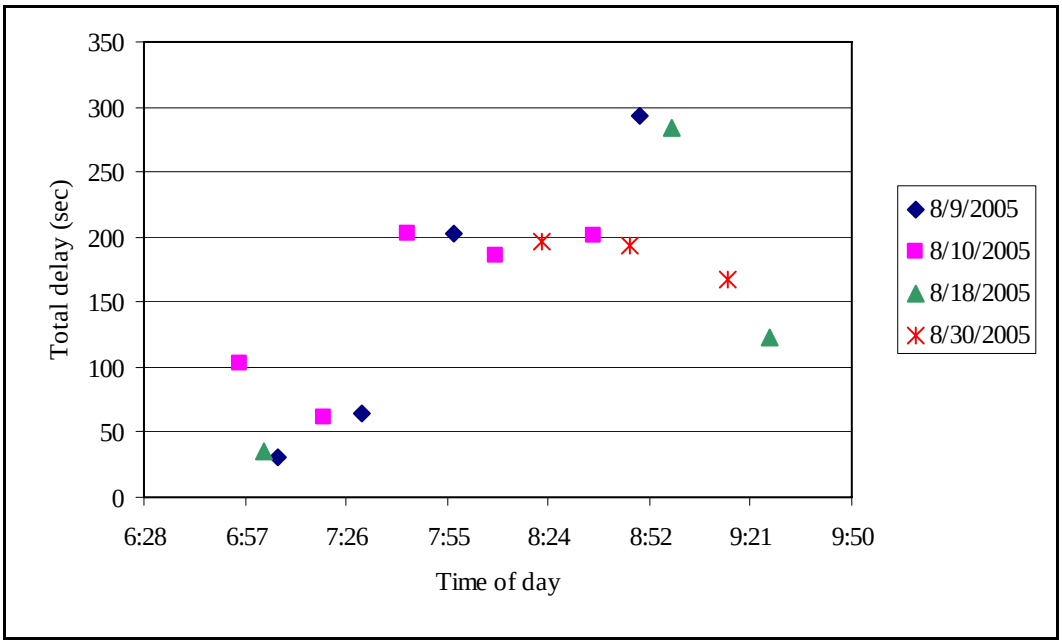

Figure 3.18: Total delay from Bitner Rd to Comstock Rd AM

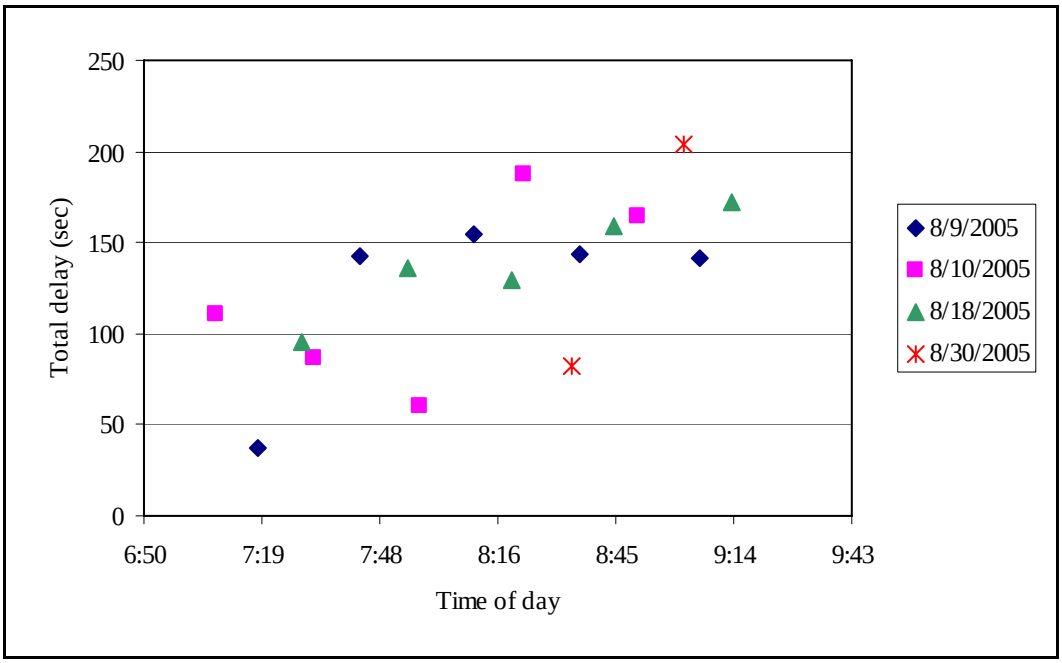

Figure 3.19: Total delay from Comstock Rd to Bitner Rd AM

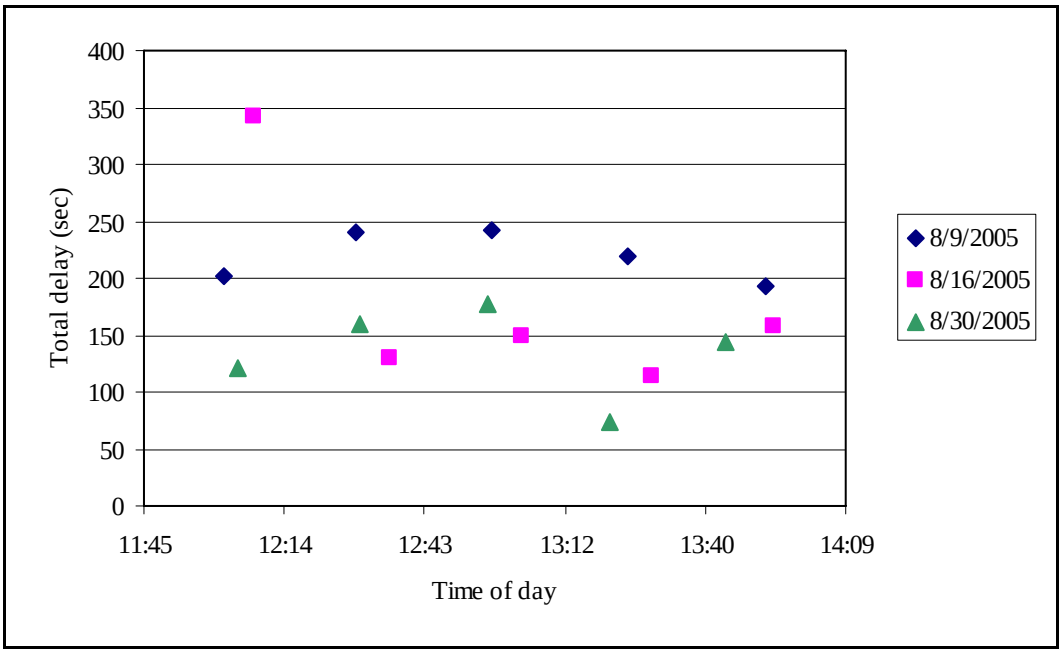

Figure 3.20: Total delay from Bitner Rd to Comstock Rd MD

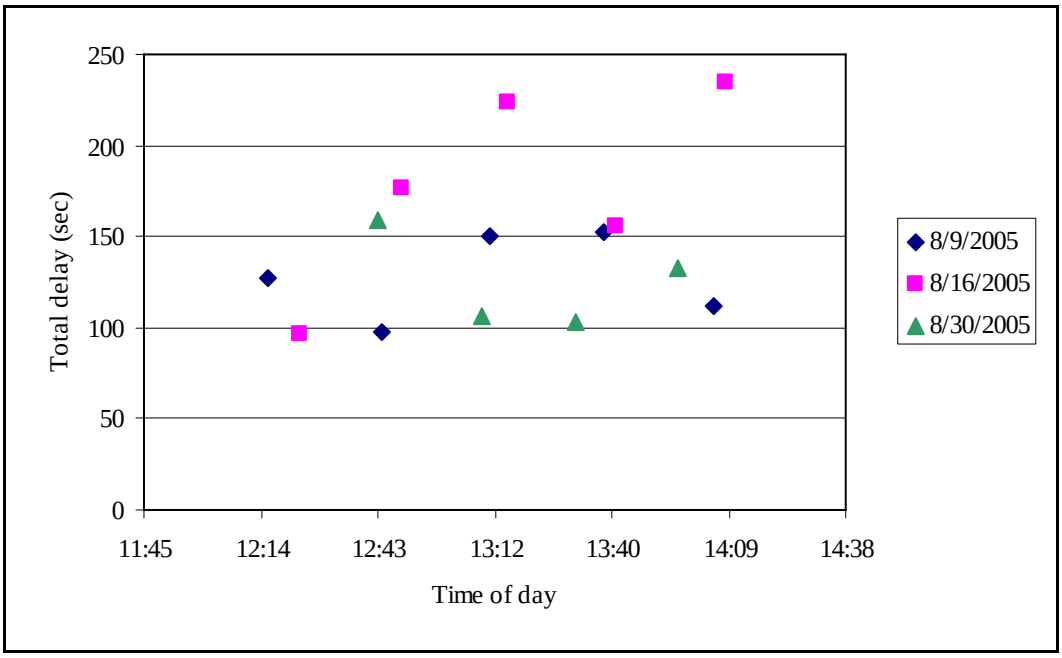

Figure 3.21: Total delay from Comstock Rd to Bitner Rd MD

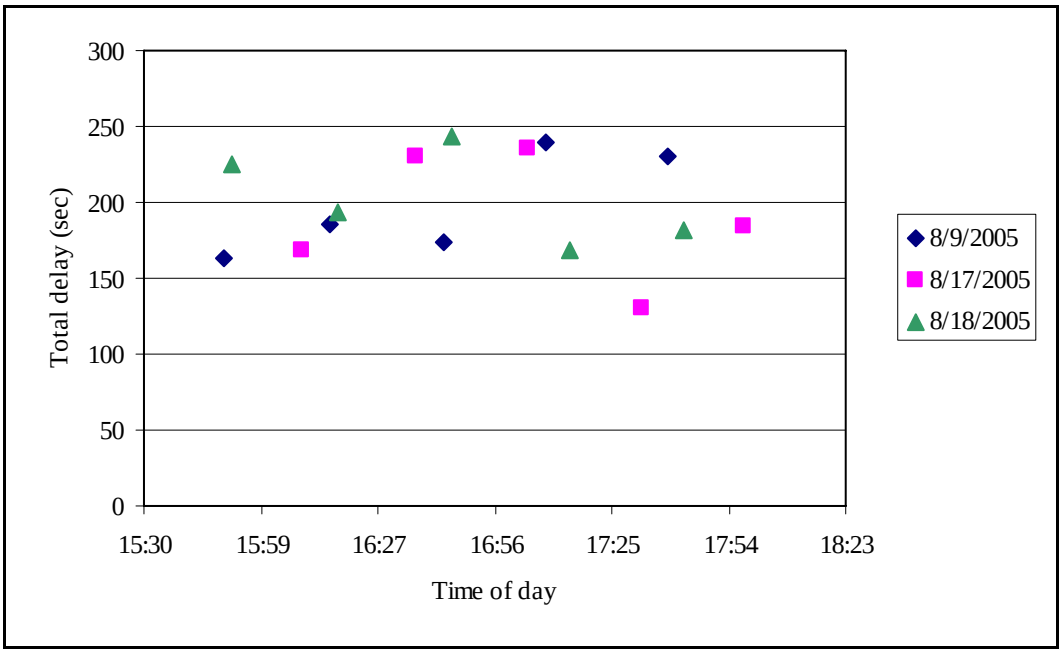

Figure 3.22: Total delay from Bitner Rd to Comstock Rd PM

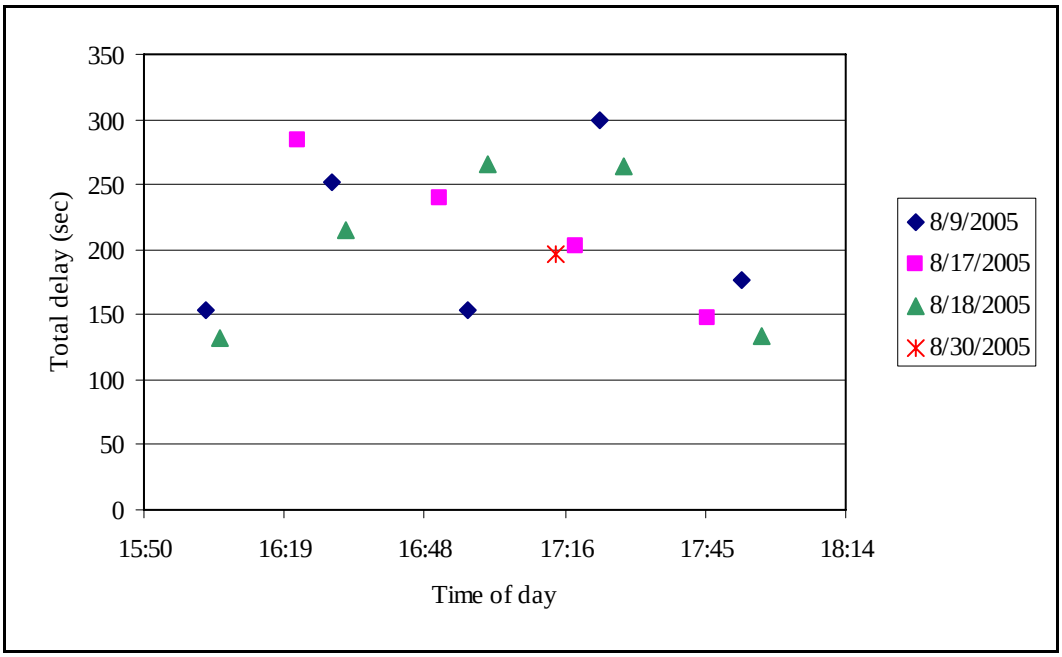

Figure 3.23: Total delay from Comstock Rd to Bitner Rd PM

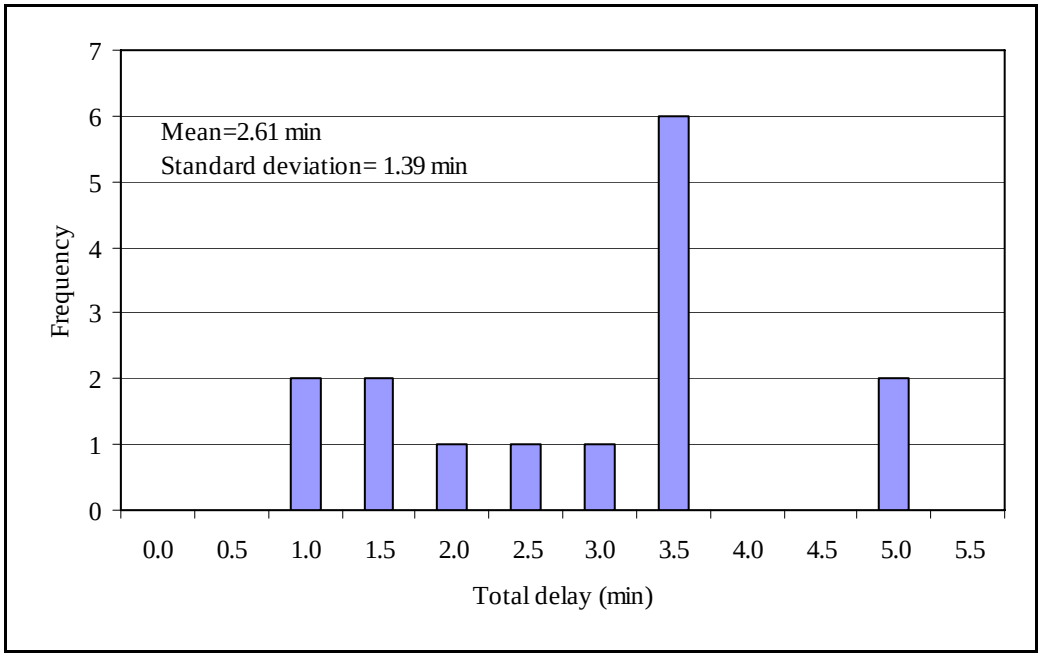

Figure 3.24: Histogram of total delays from Bitner Rd to Comstock Rd AM

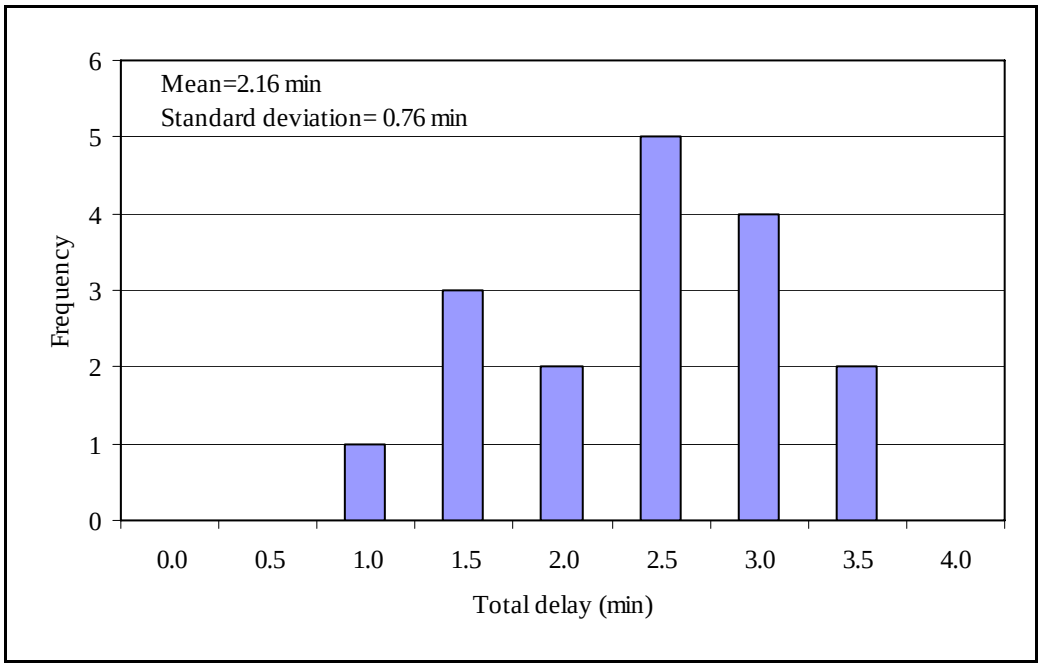

Figure 3.25: Histogram of total delays from Comstock Rd to Bitner Rd AM

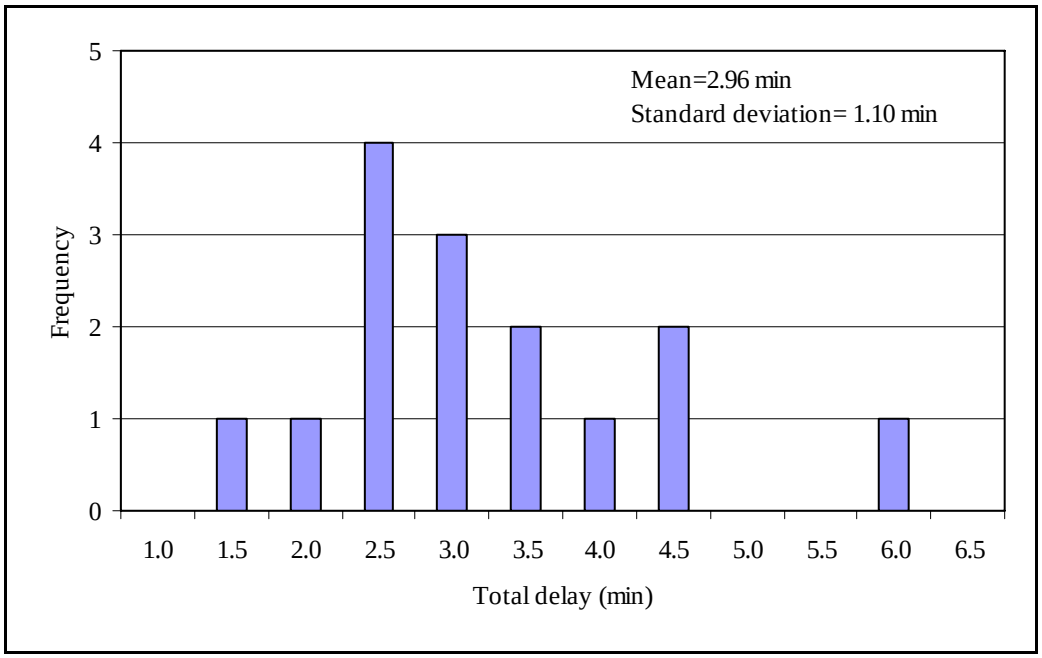

Figure 3.26: Histogram of total delays from Bitner Rd to Comstock Rd MD

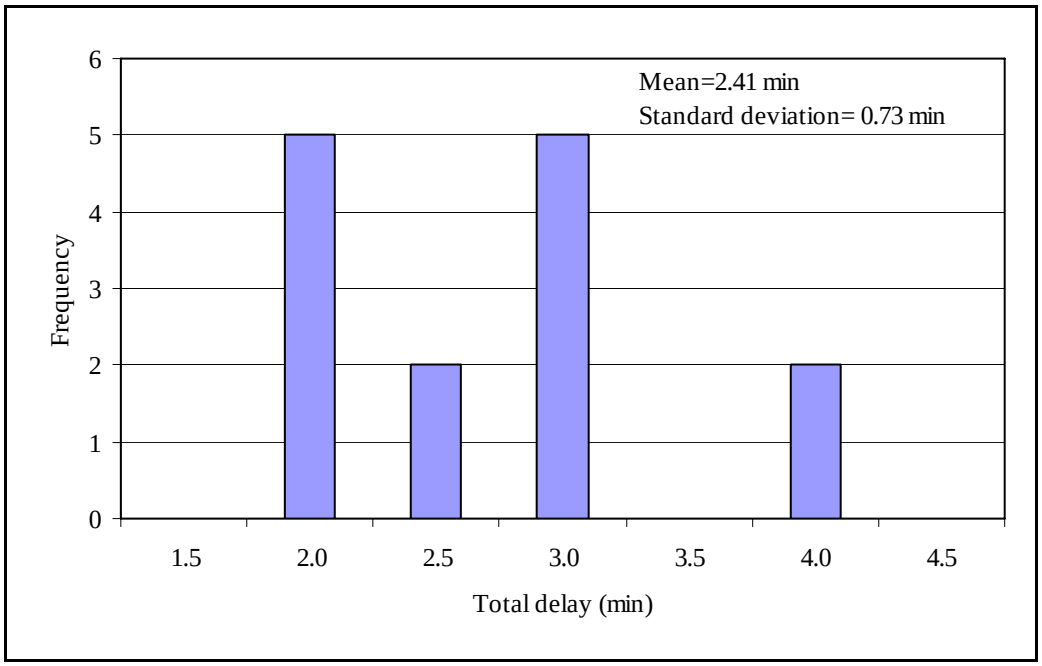

Figure 3.27: Histogram of total delays from Comstock Rd to Bitner Rd MD

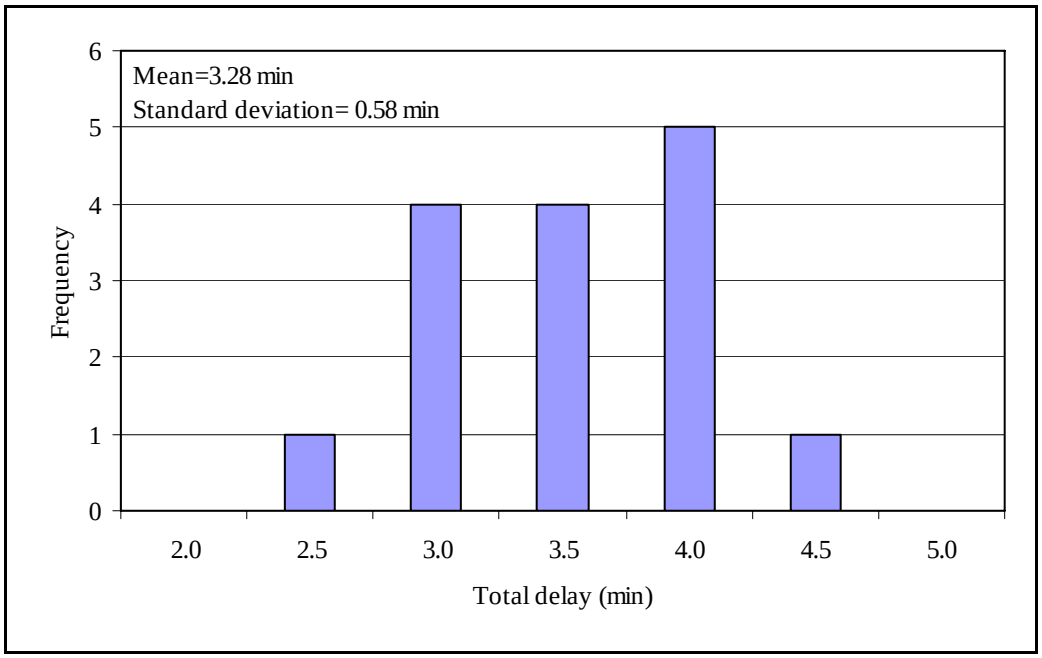

Figure 3.28: Histogram of total delays from Bitner Rd to Comstock Rd PM

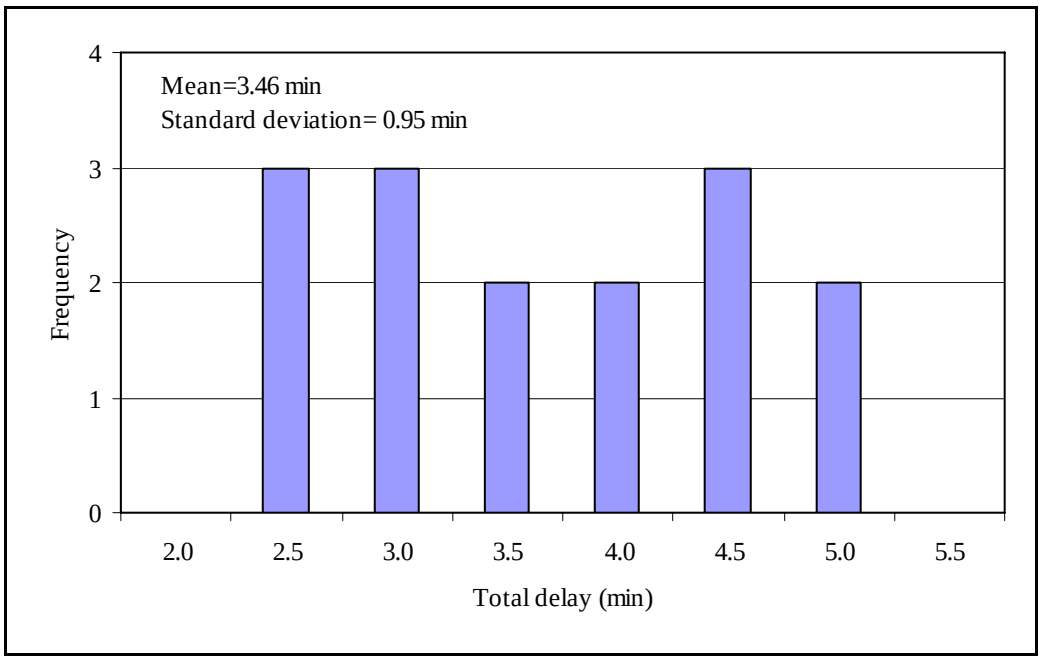

Figure 3.29: Histogram of total delays from Comstock Rd to Bitner Rd PM

3.1.4 Number of Stops

The data for the number of stops study were collected according to the process explained in chapter 2.5. The first set of graphs represents the number of stops as a function of time of day for three peak periods (morning, noon, afternoon). The graphs show the number of stops that one experiences traveling to and from Park City. The Number of stops depends on what time the journey starts. The second set of graphs shows the distribution of the number of stops. Each graph with a histogram shows mean and standard deviation.

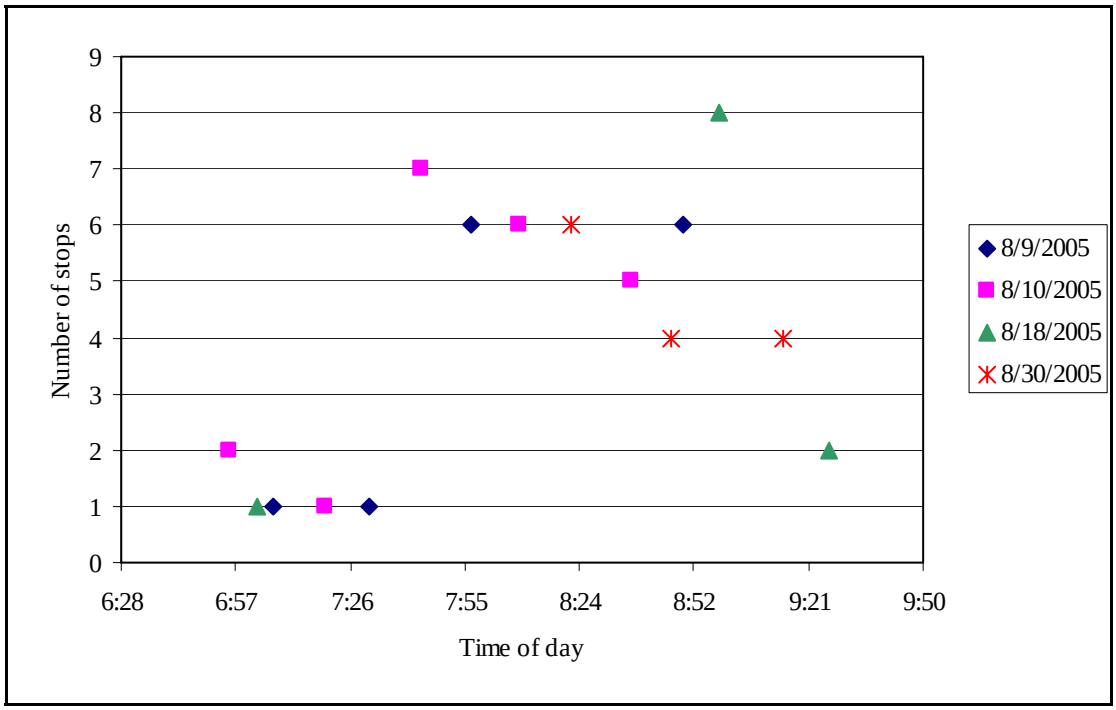

Figure 3.30: Number of stops from Bitner Rd to Comstock Rd AM

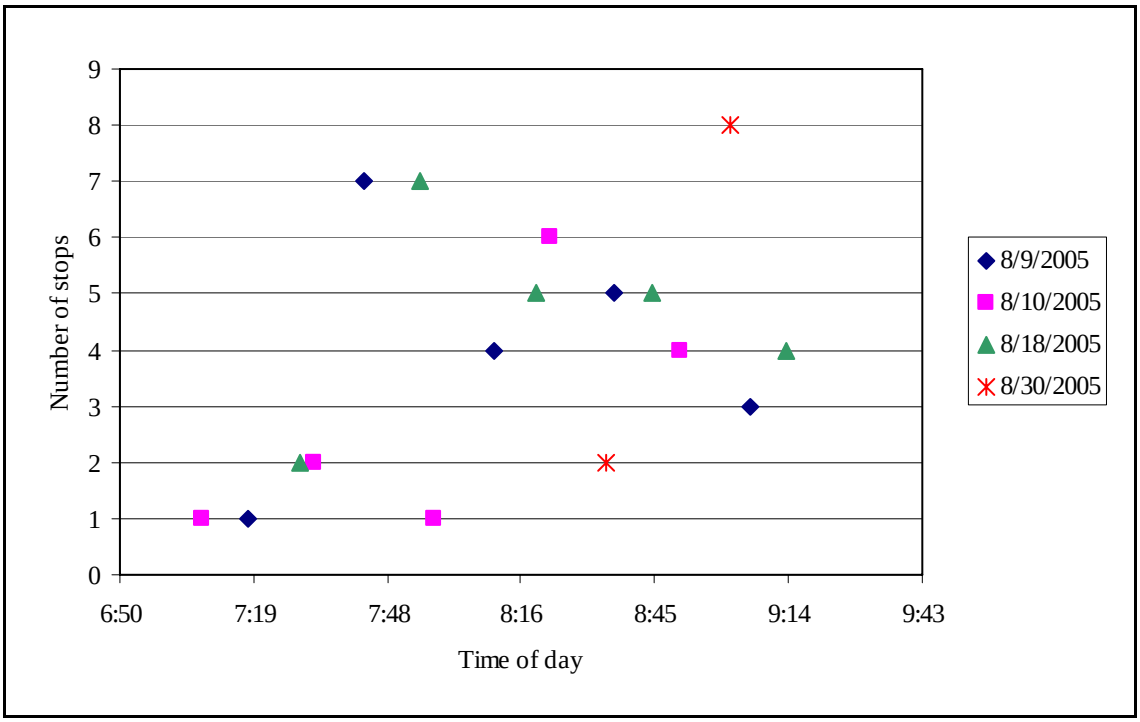

Figure 3.31: Number of stops from Comstock Rd to Bitner Rd AM

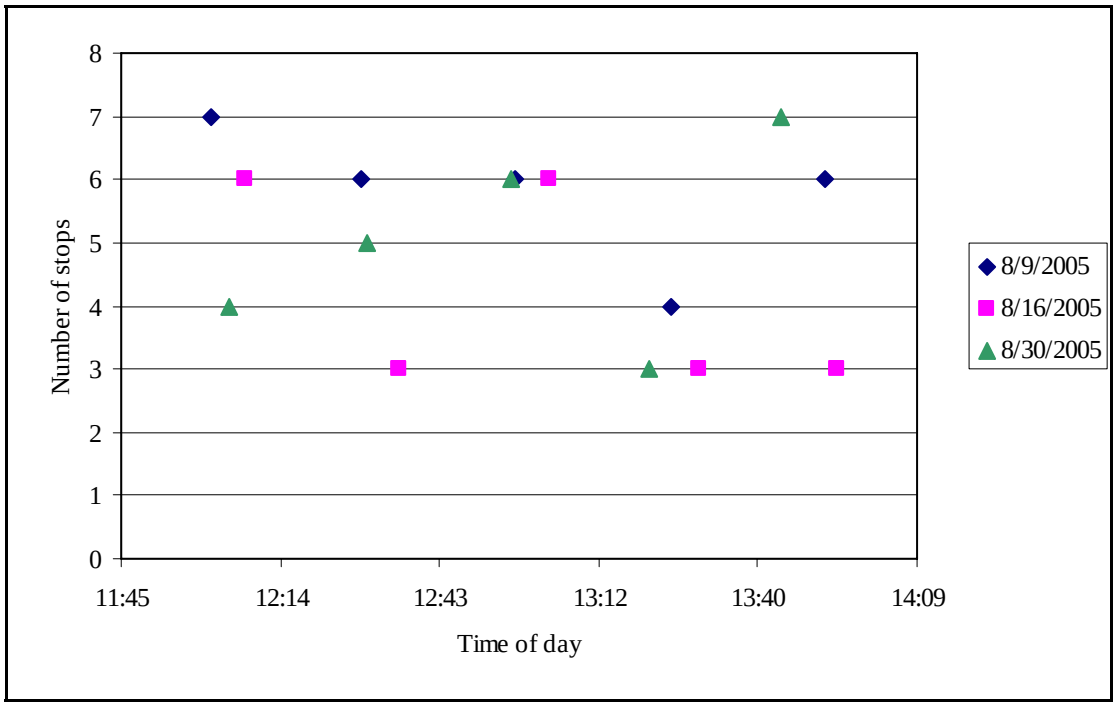

Figure 3.32: Number of stops from Bitner Rd to Comstock Rd MD

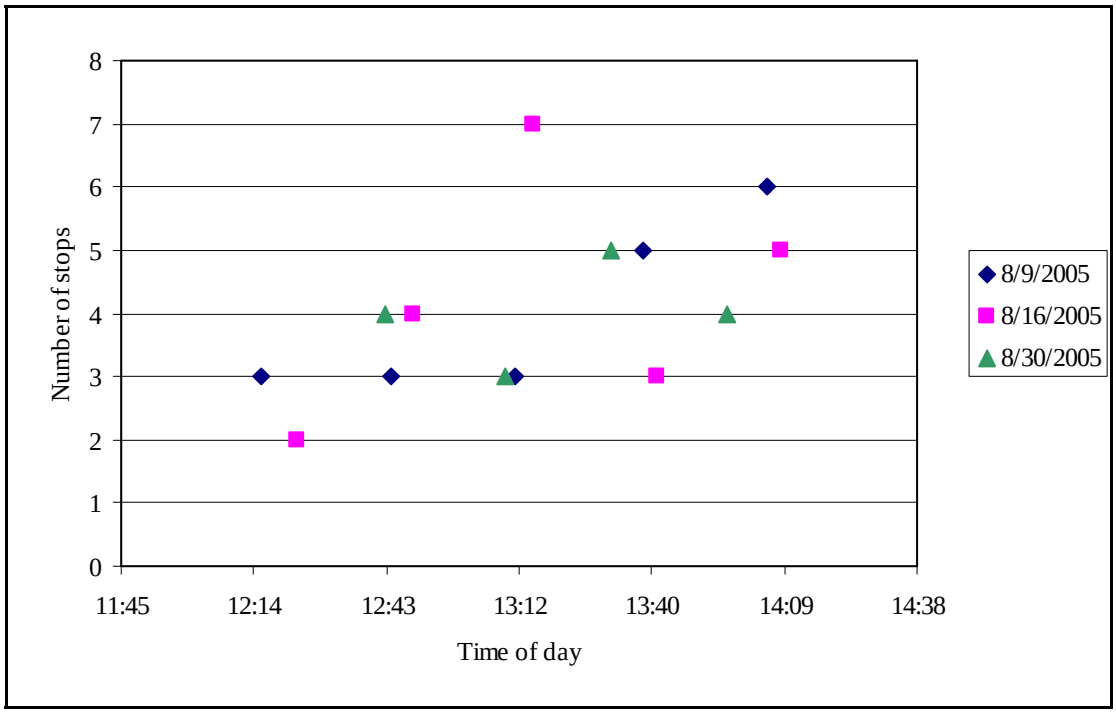

Figure 3.33: Number of stops from Comstock Rd to Bitner Rd MD

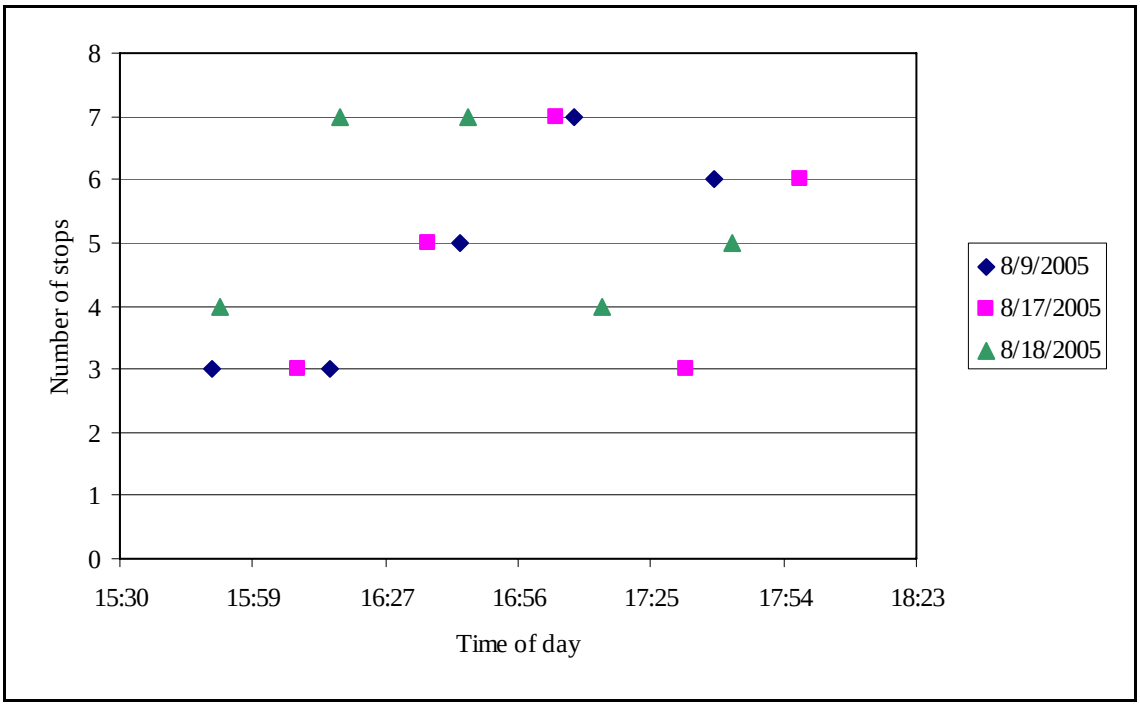

Figure 3.34: Number of stops from Bitner Rd to Comstock Rd PM

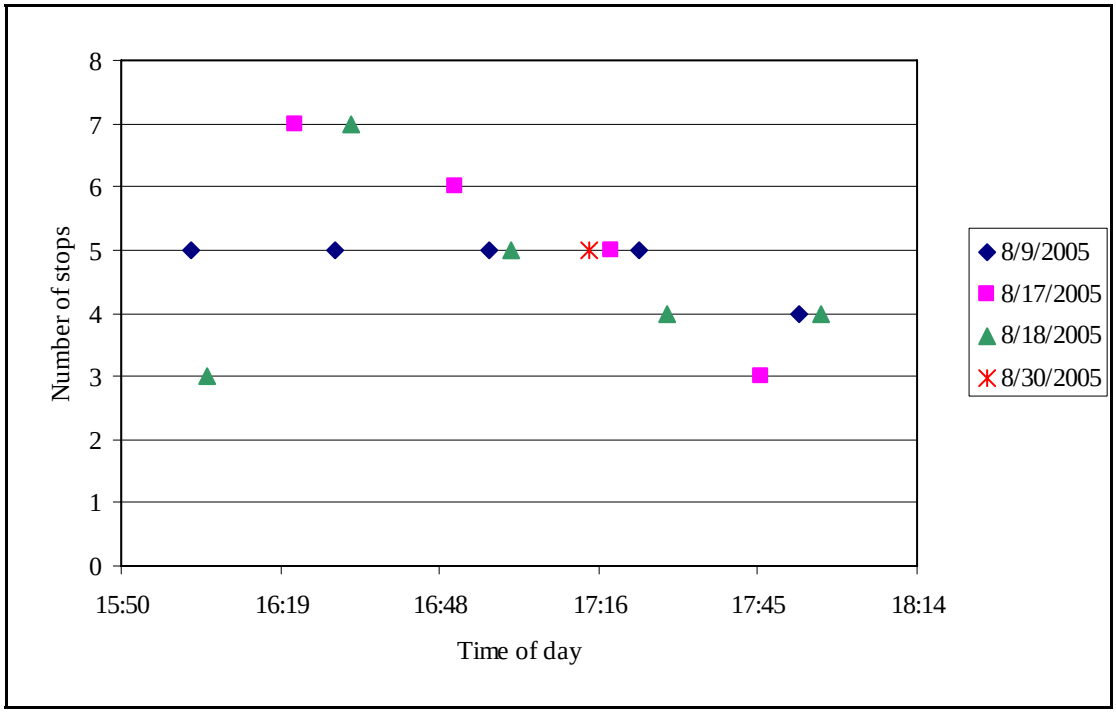

Figure 3.35: Number of stops from Comstock Rd to Bitner Rd PM

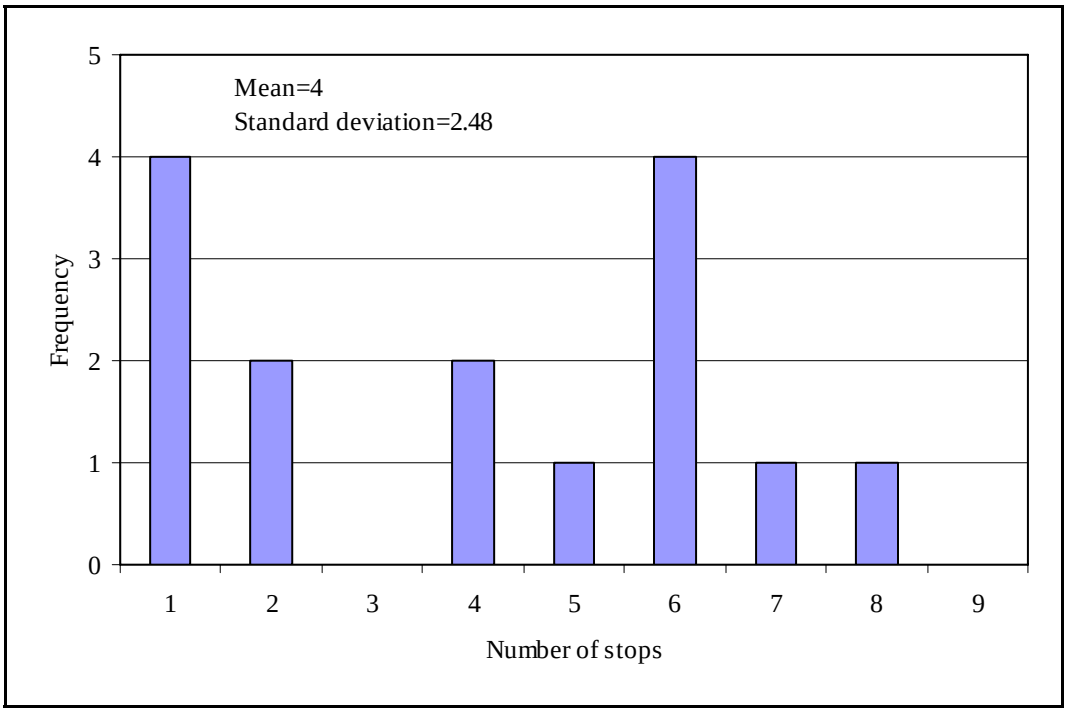

Figure 3.36: Histogram of number of stops from Bitner Rd to Comstock Rd AM

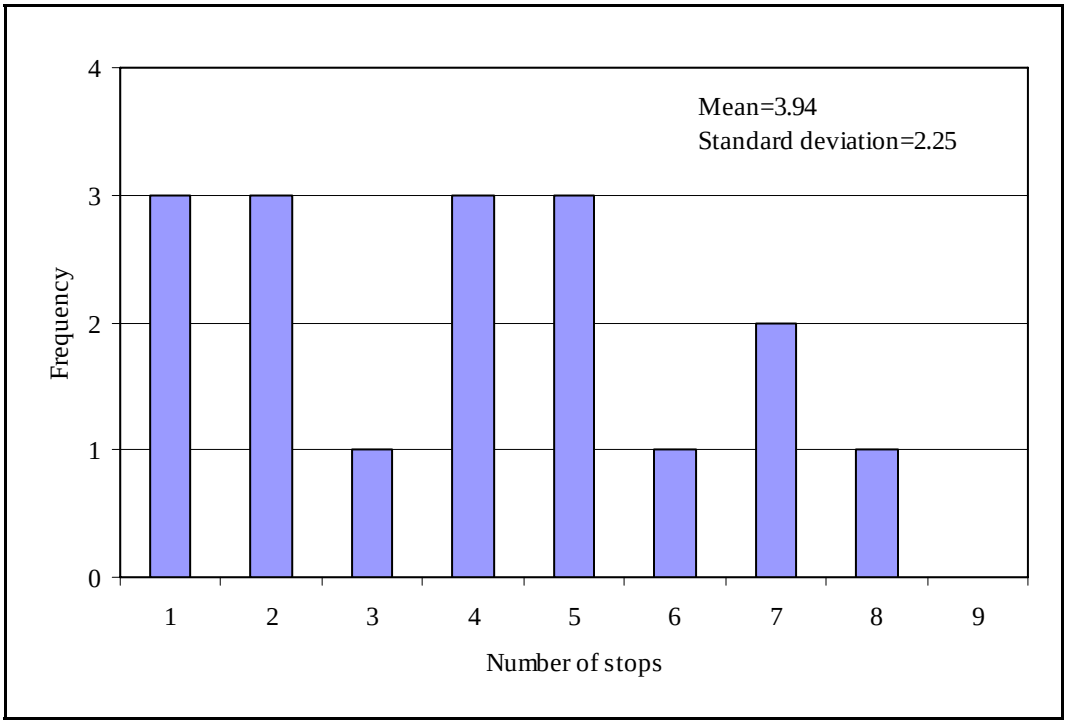

Figure 3.37: Histogram of number of stops from Comstock Rd to Bitner Rd AM

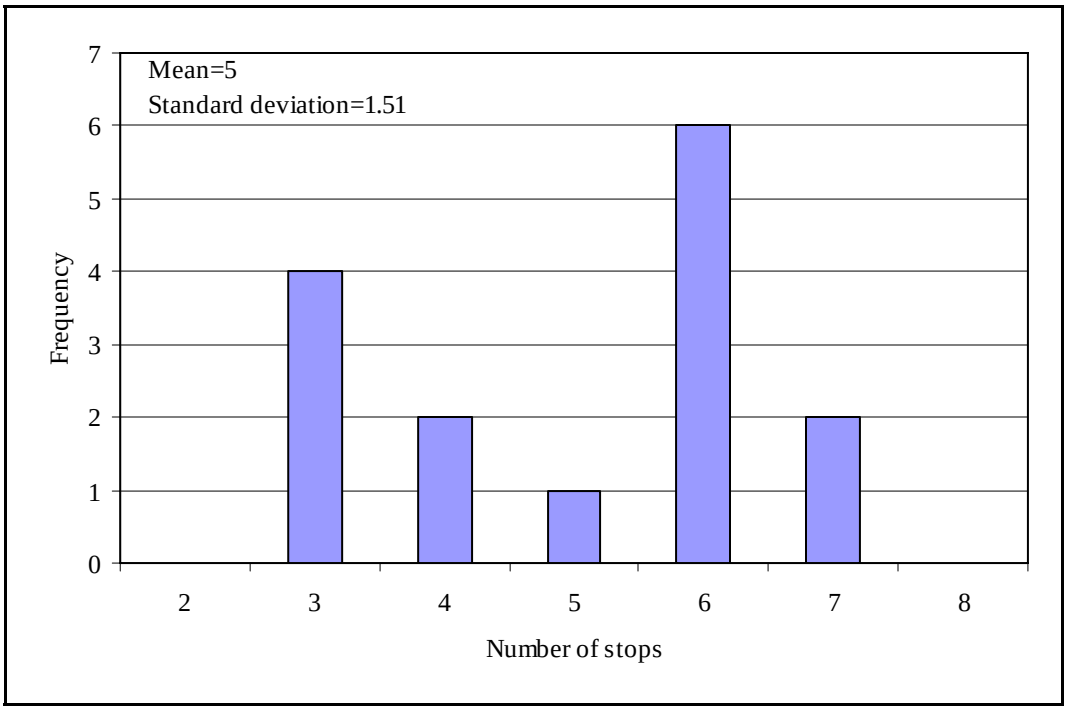

Figure 3.38: Histogram of number of stops from Bitner Rd to Comstock Rd MD

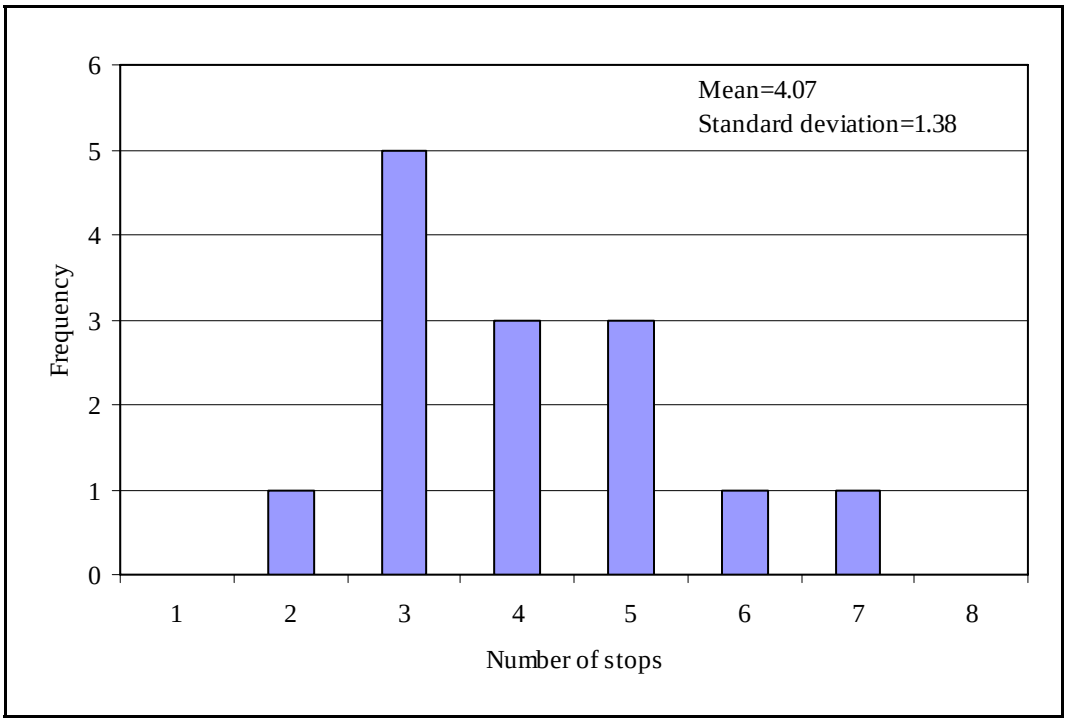

Figure 3.39: Histogram of number of stops from Comstock Rd to Bitner Rd MD

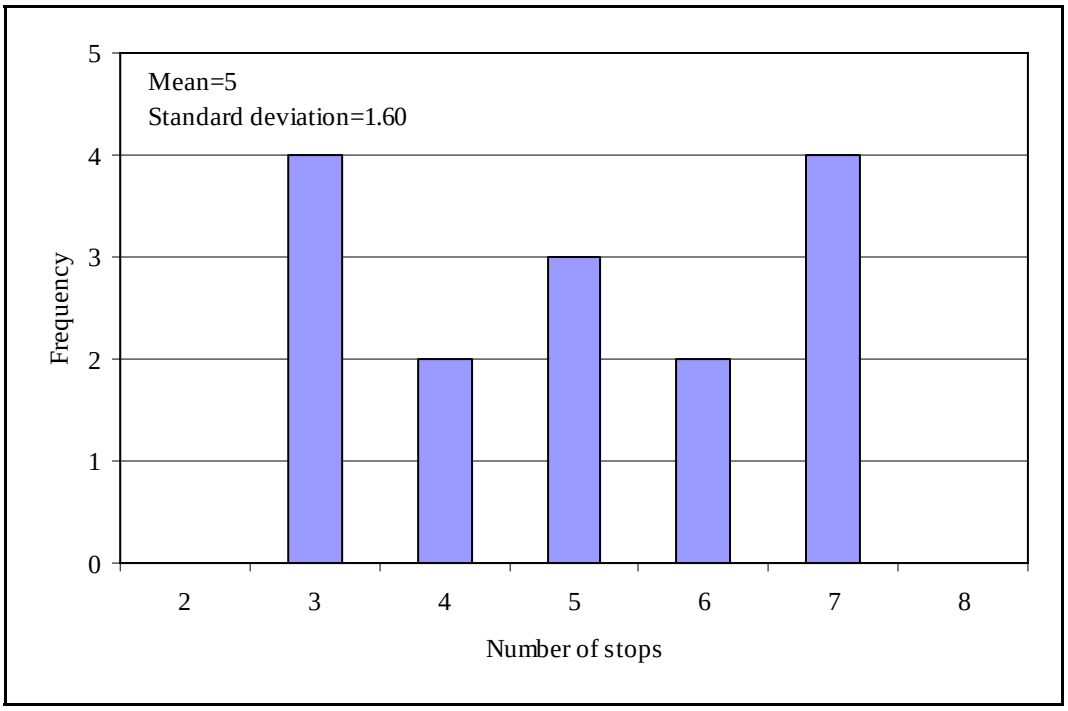

Figure 3.40: Histogram of number of stops from Bitner Rd to Comstock Rd PM

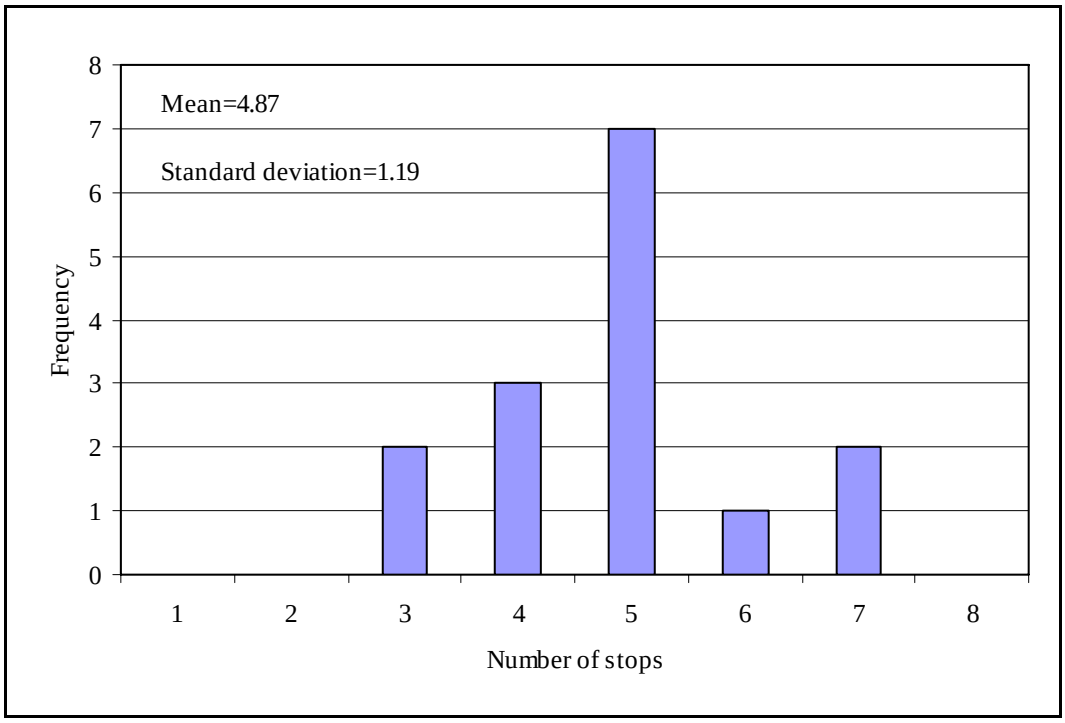

Figure 3.41: Histogram of number of stops from Comstock Rd to Bitner Rd PM

3.1.5 Average Speed

Average speed is calculated based on measured travel times and distances between each intersection. Average speed actually represents running speed between two neighboring intersections. The speeds are shown on two graphs (one for each direction). Posted speeds are also shown on the graphs for the purpose of comparing running and posted speeds.

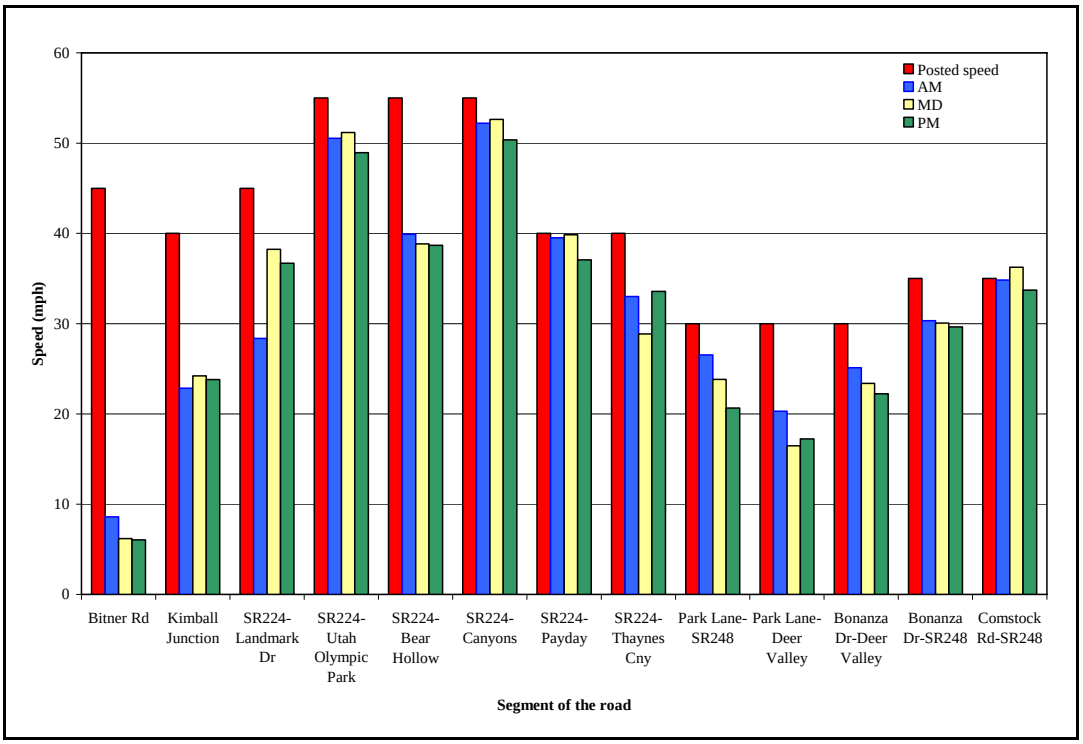

Figure 3.42: Average speed from Bitner Rd to Comstock Rd

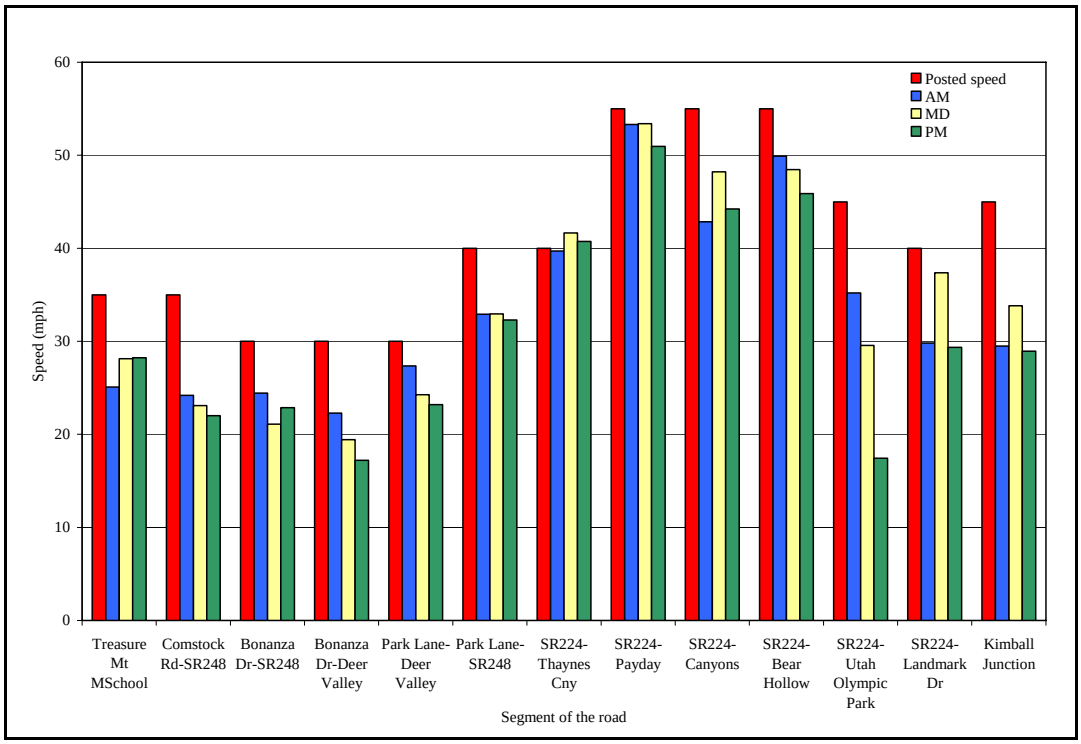

Figure 3.43: Average speed from Comstock Rd to Bitner Rd

3.1.6 Turning Movement Counts

The following results represent turning movement counts (that were collected according to the process explained in chapter 2.7). Each figure includes turning movement counts for three diurnal peak periods. The values for Peak Hour Volume (PHV) and Peak Hour Factor (PHF) are also included in each figure. PHV is the maximum number of vehicles that pass a point on a highway during a period of 60 consecutive minutes. PHF is a measure of the variability of demand during the peak hour. It is the ratio of the volume during the peak hour to the maximum rate of flow during a given time period within the peak hour. The time period used for intersections is 15 min, and the PHF is given as:

$$\text{PHF} = \frac{\text{volume during peak hour}}{4 \times \text{volume during peak 15 min within peak hour}}$$

AM PEAK HOUR VOLUMES

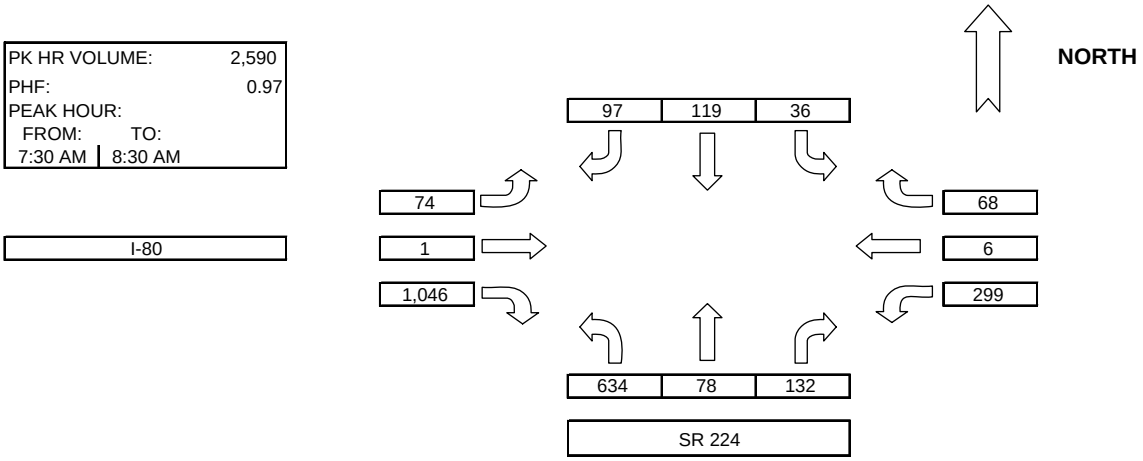

MID DAY OFF-PEAK HOUR VOLUMES

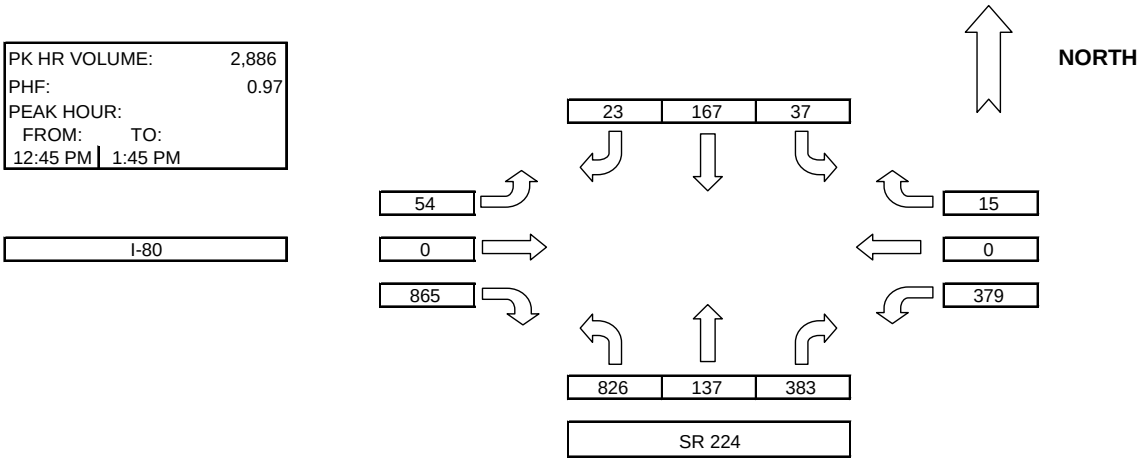

PM PEAK HOUR VOLUMES

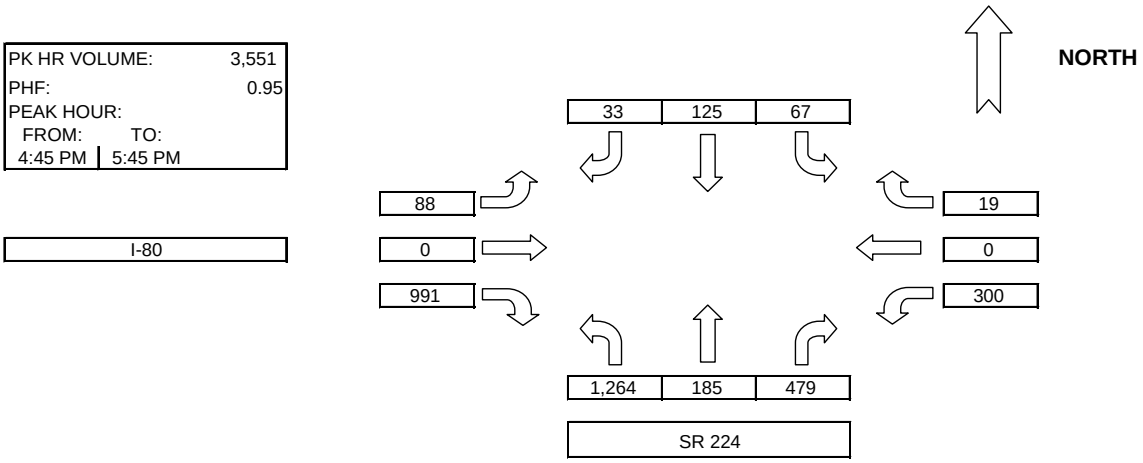

Figure 3.44: Turning movement counts for Kimball Junction (I-80 – SR224)

AM PEAK HOUR VOLUMES

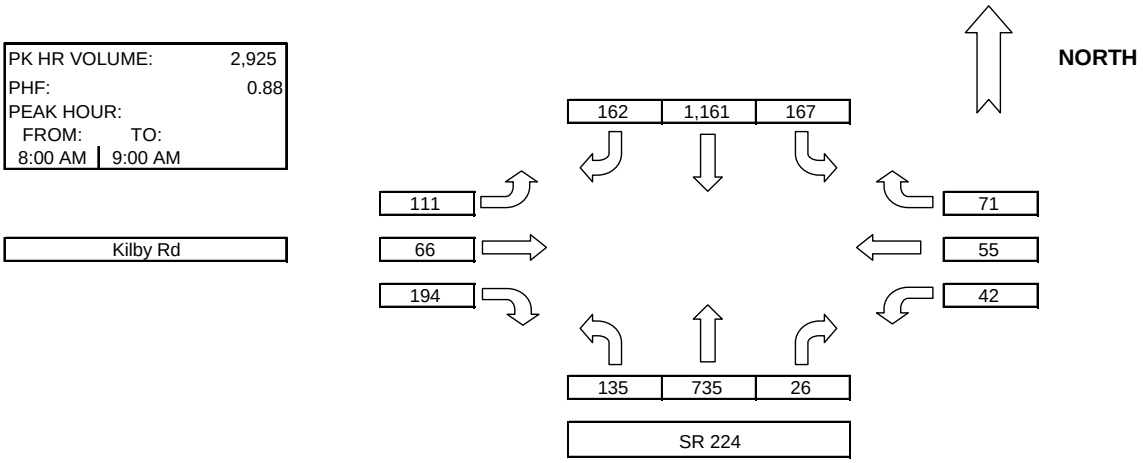

MID DAY OFF-PEAK HOUR VOLUMES

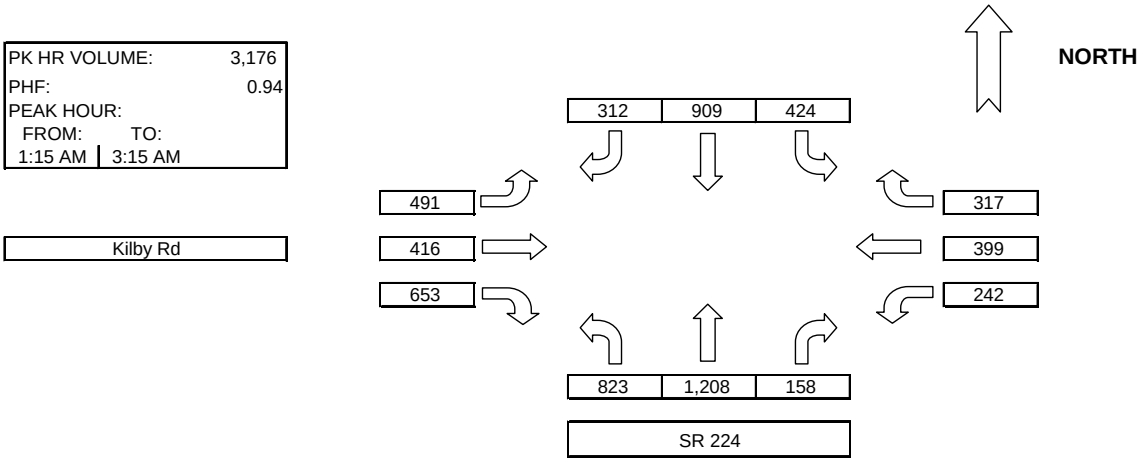

PM PEAK HOUR VOLUMES

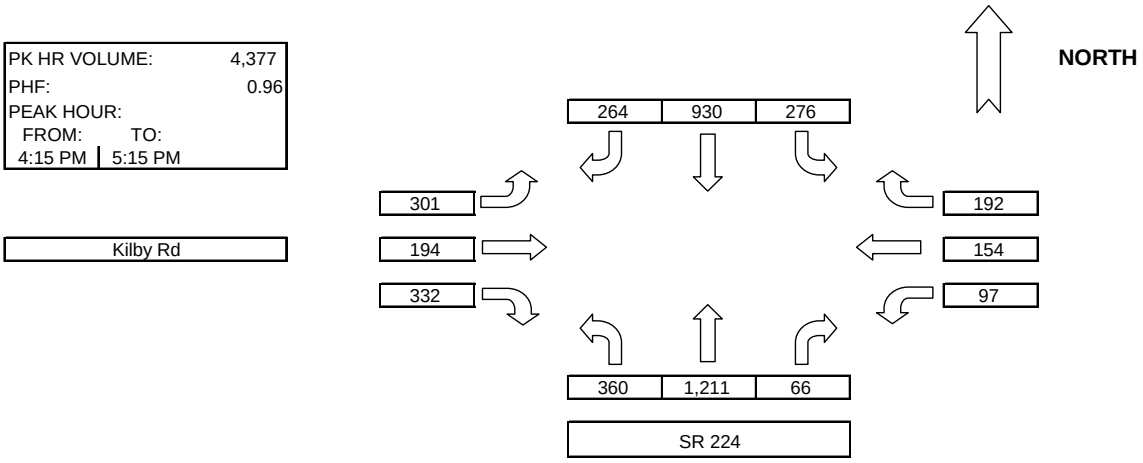

Figure 3.45: Turning movement counts for SR224 – Landmark Dr

AM PEAK HOUR VOLUMES

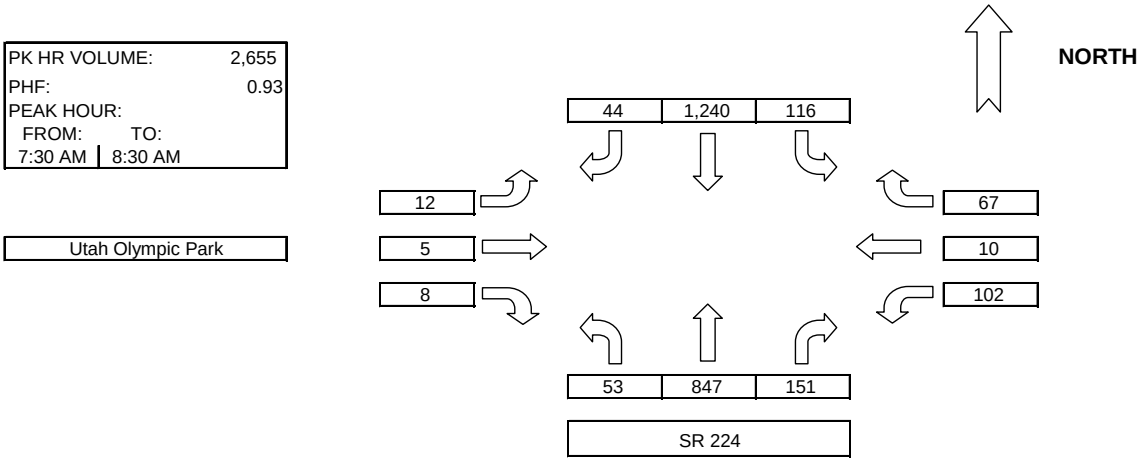

MID DAY OFF-PEAK HOUR VOLUMES

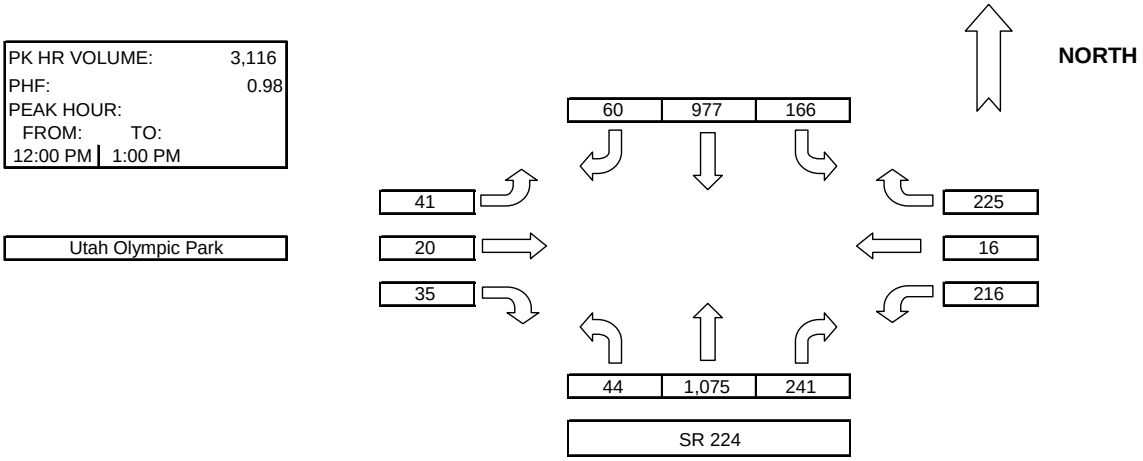

PM PEAK HOUR VOLUMES

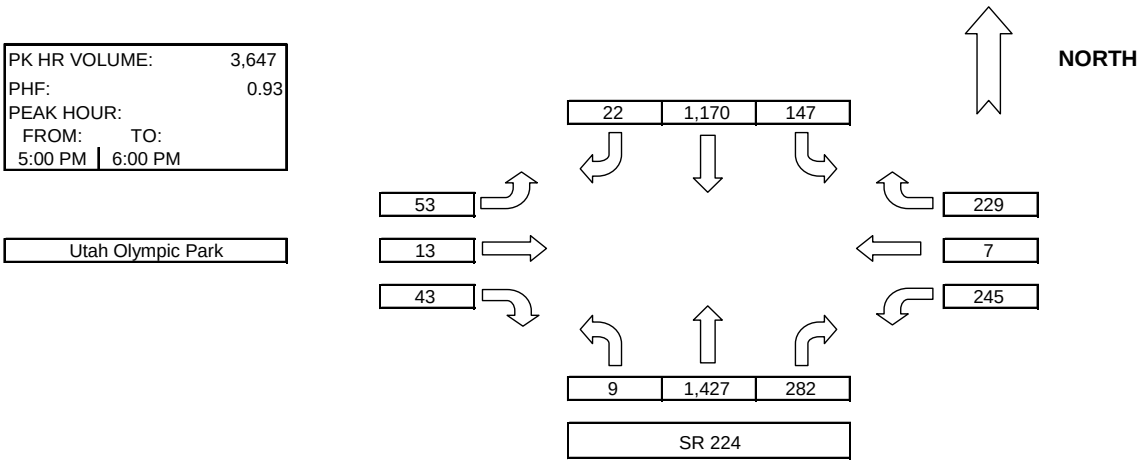

Figure 3.46: Turning movement counts for SR224 – Utah Olympic Park

AM PEAK HOUR VOLUMES

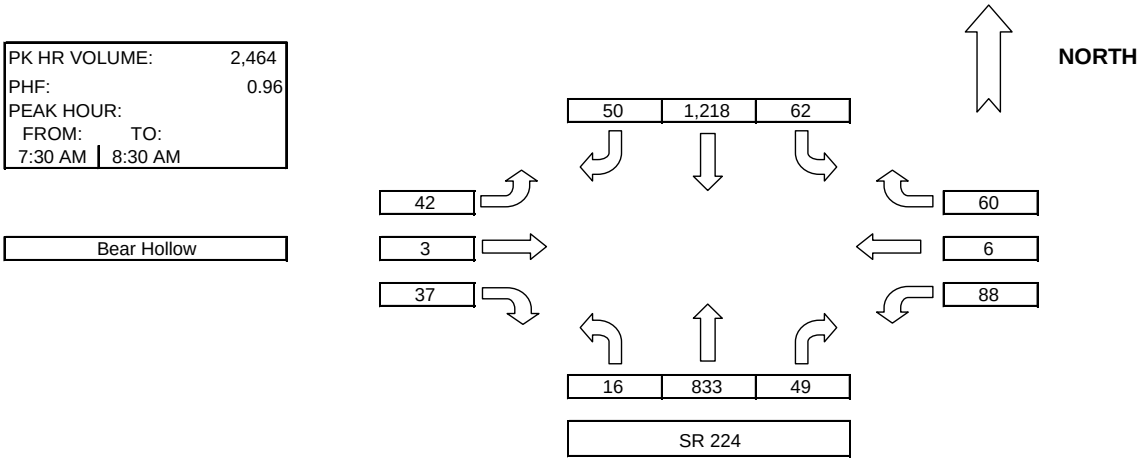

MID DAY OFF-PEAK HOUR VOLUMES

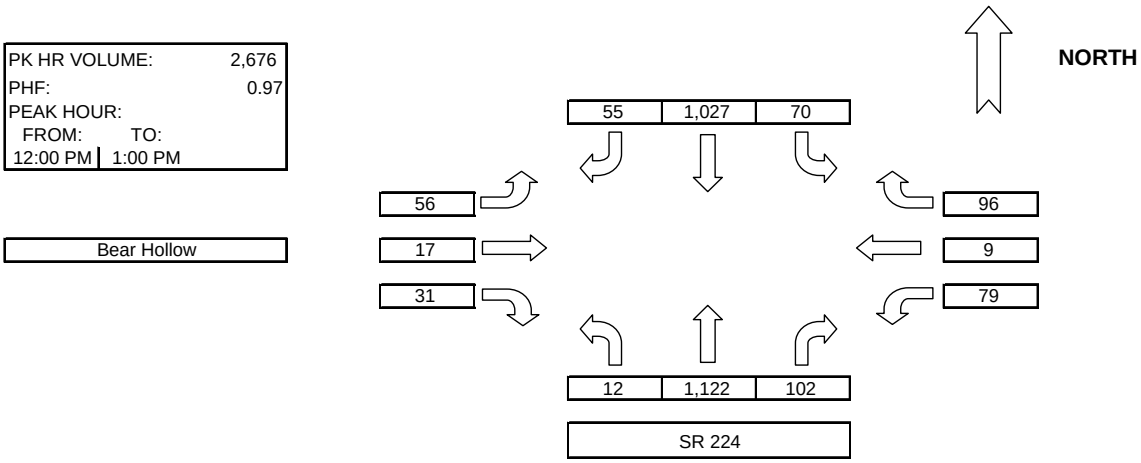

PM PEAK HOUR VOLUMES

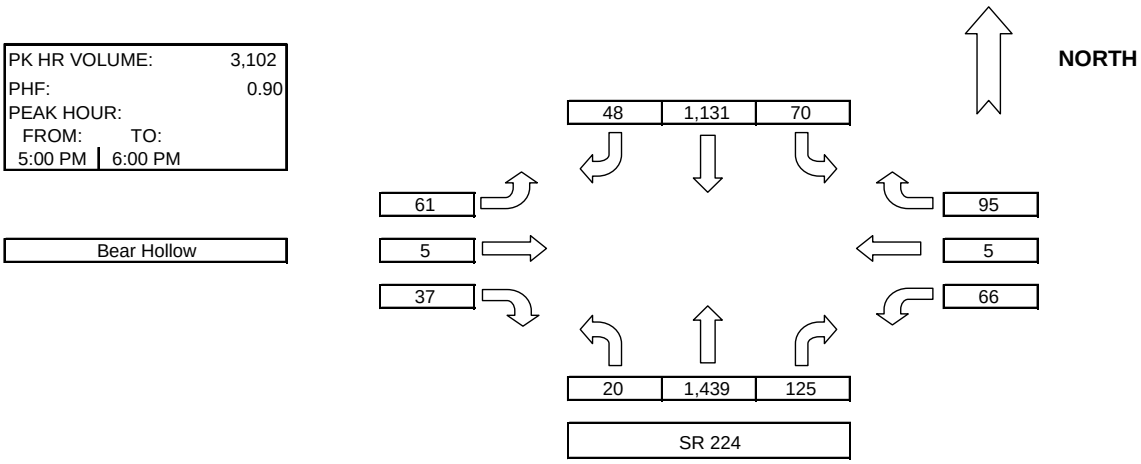

Figure 3.47: Turning Movement Counts for SR224 – Bear Hollow

AM PEAK HOUR VOLUMES

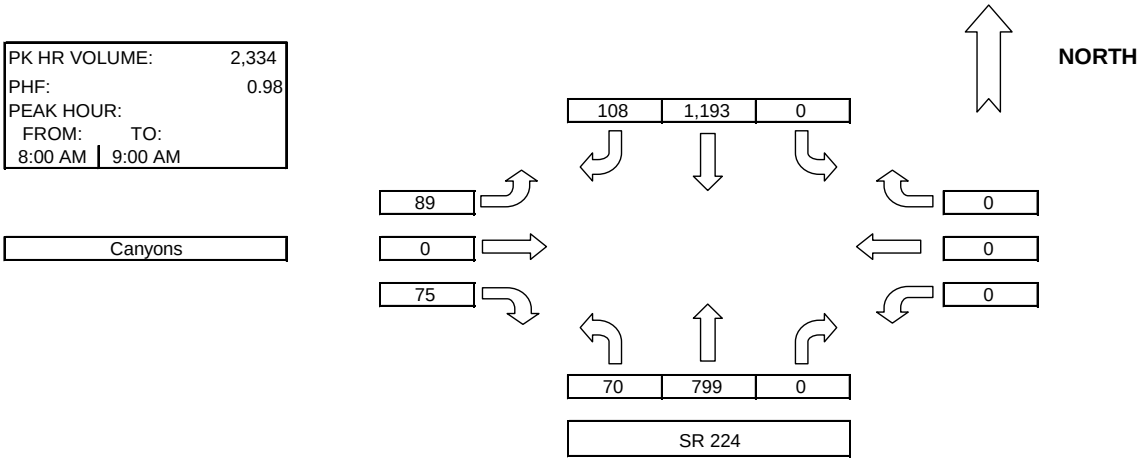

MID DAY OFF-PEAK HOUR VOLUMES

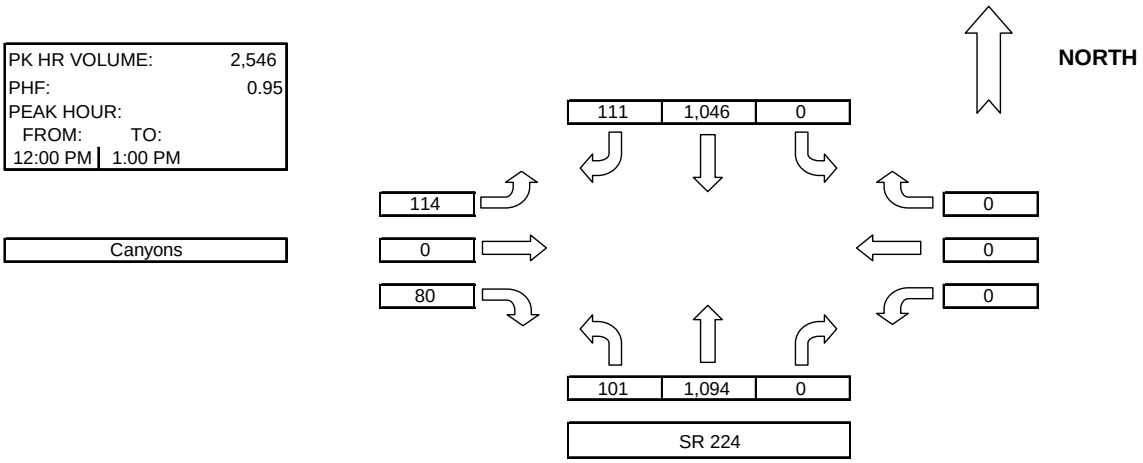

PM PEAK HOUR VOLUMES

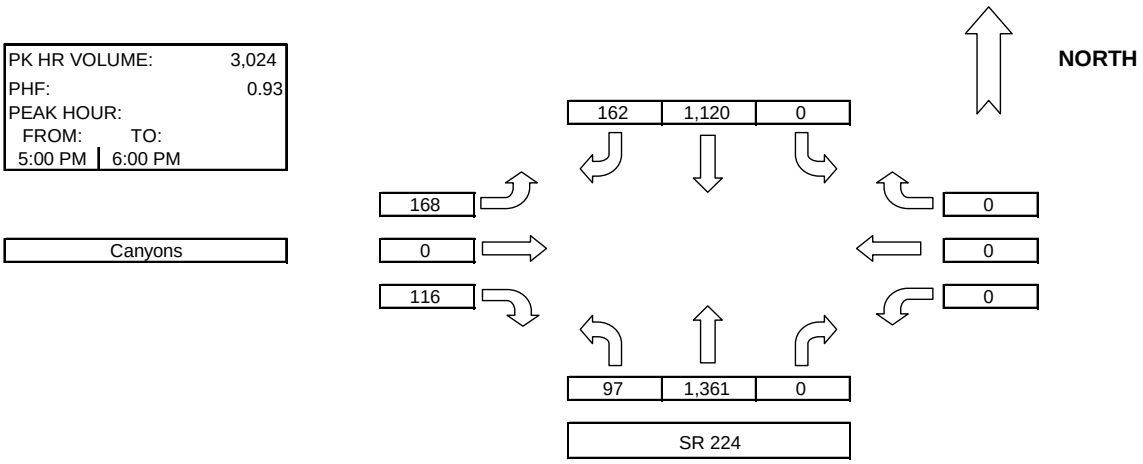

Figure 3.48: Turning movement counts for SR224 – Canyons

AM PEAK HOUR VOLUMES

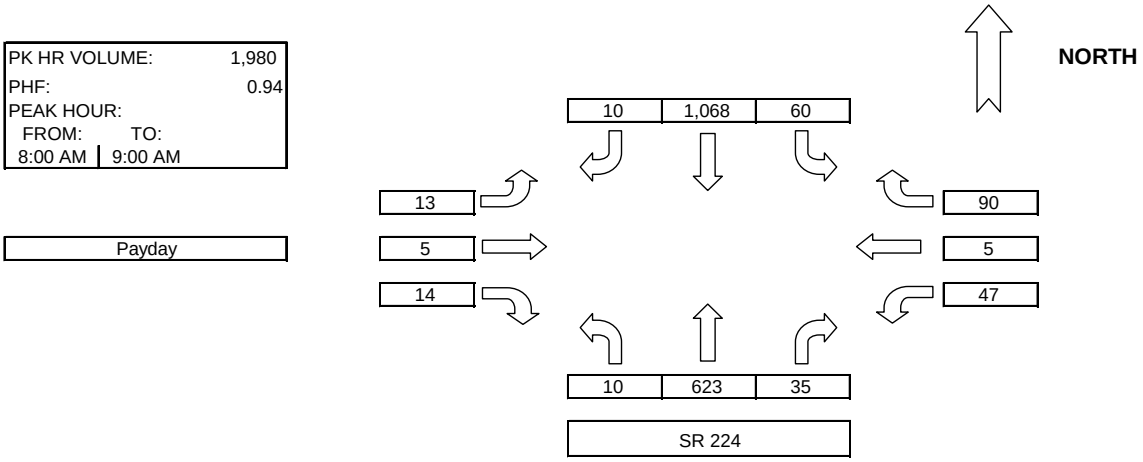

MID DAY OFF-PEAK HOUR VOLUMES

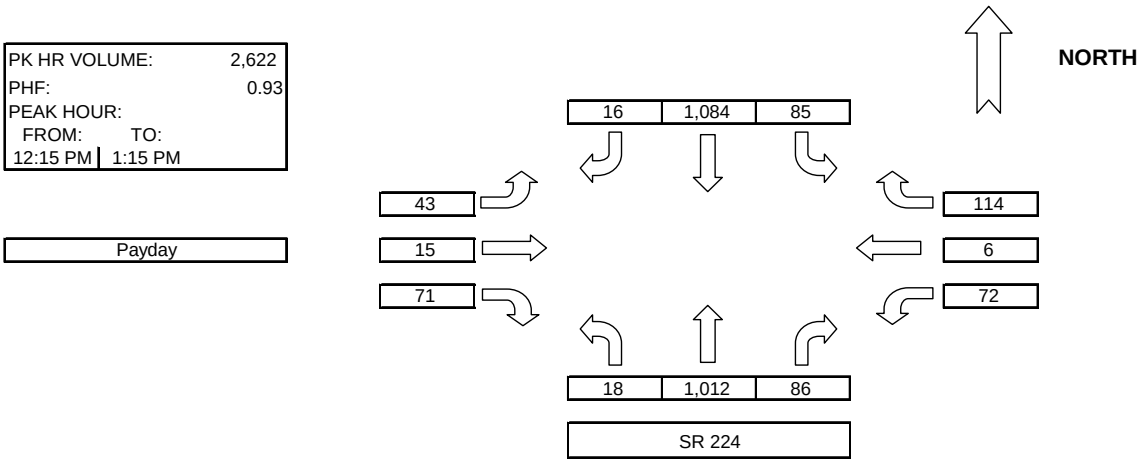

PM PEAK HOUR VOLUMES

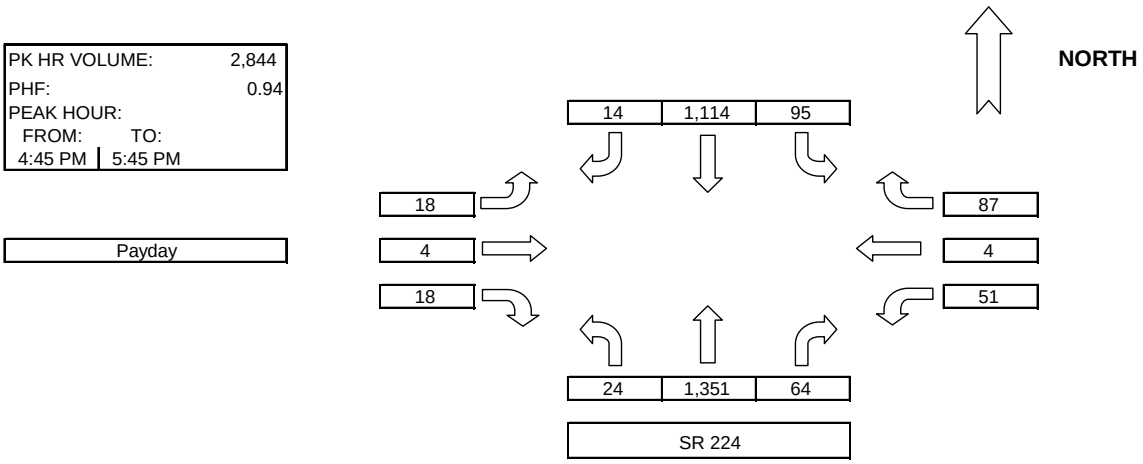

Figure 3.49: Turning movement counts for SR224 – Payday

AM PEAK HOUR VOLUMES

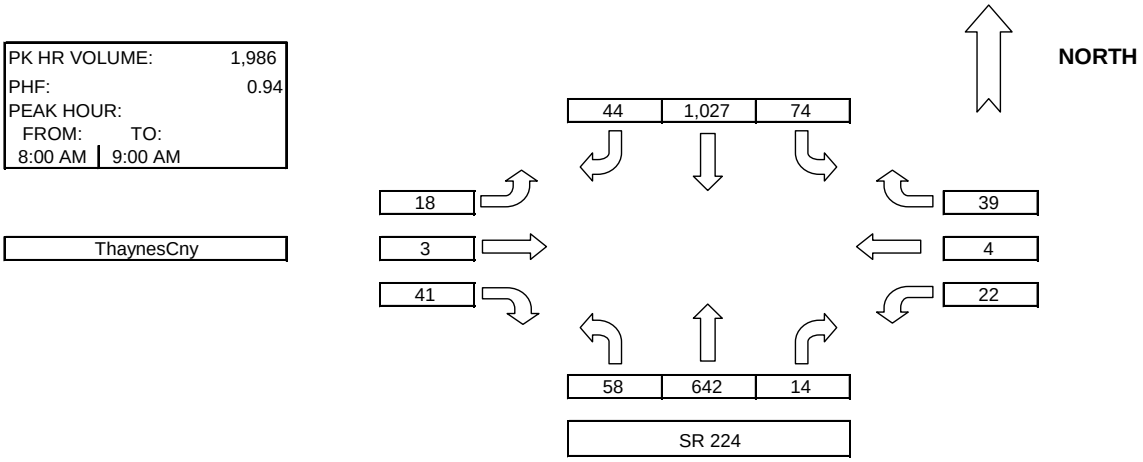

MID DAY OFF-PEAK HOUR VOLUMES

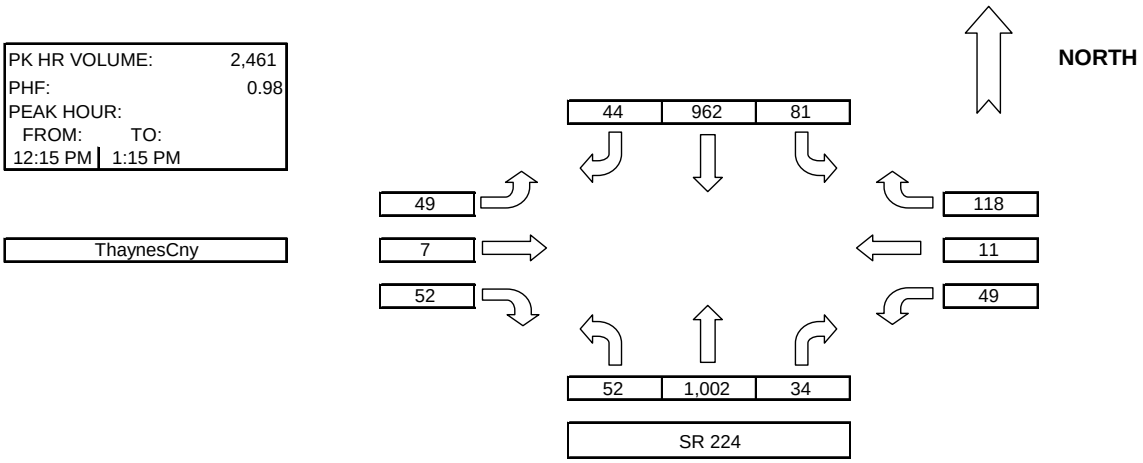

PM PEAK HOUR VOLUMES

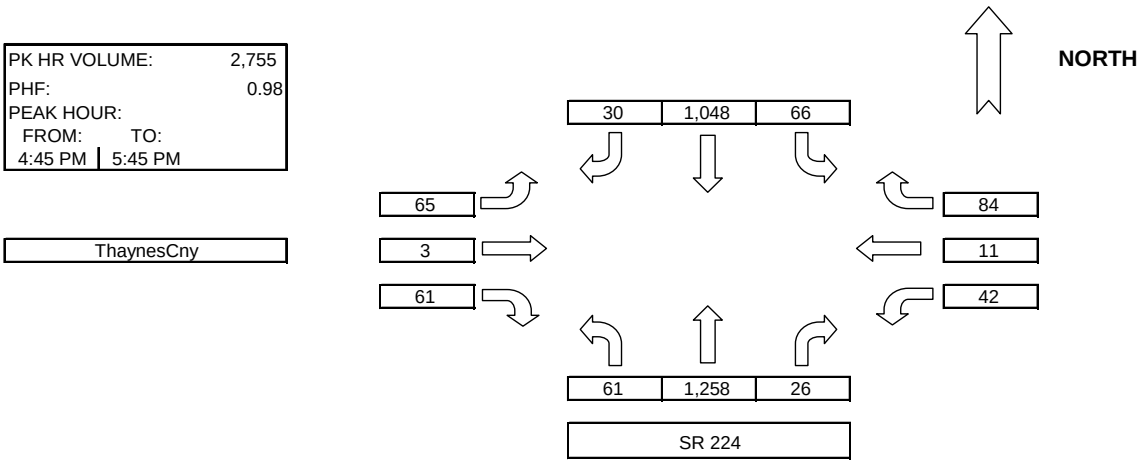

Figure 3.50: Turning movement counts for SR224 – Thaynes Canyon

AM PEAK HOUR VOLUMES

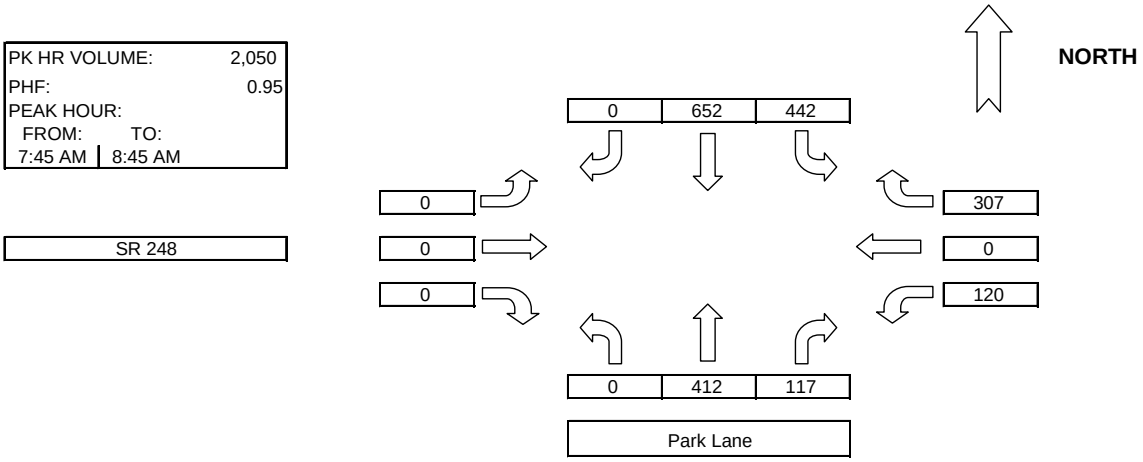

MID DAY OFF-PEAK HOUR VOLUMES

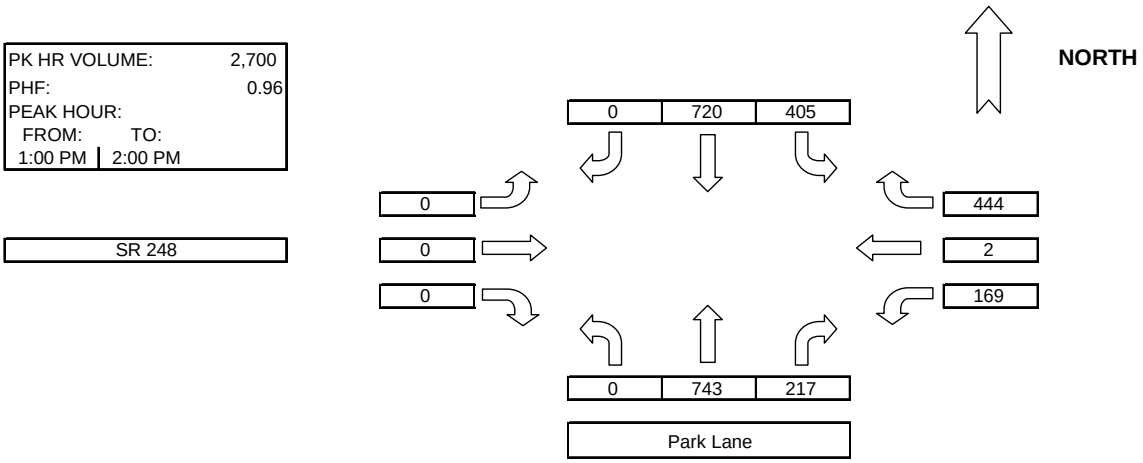

PM PEAK HOUR VOLUMES

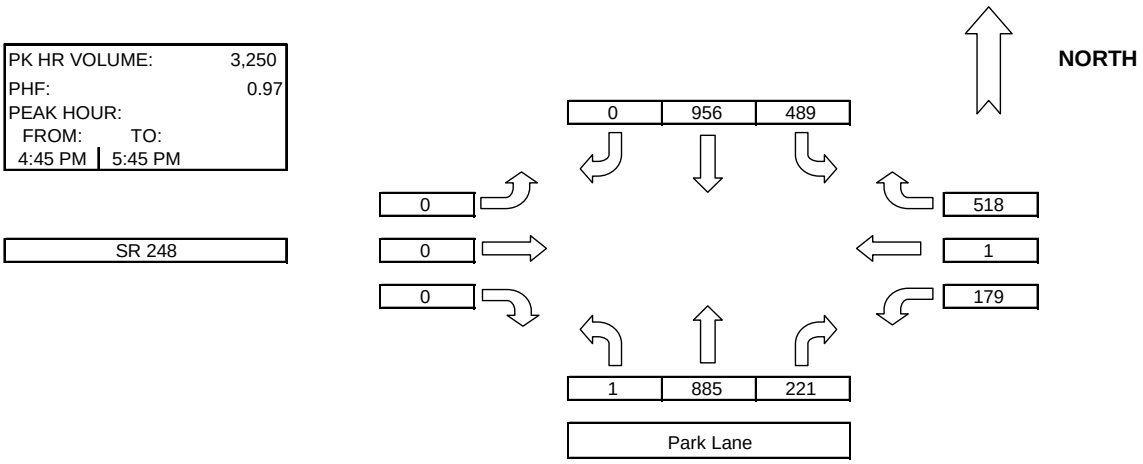

Figure 3.51: Turning movement counts for Park Lane – SR248

AM PEAK HOUR VOLUMES

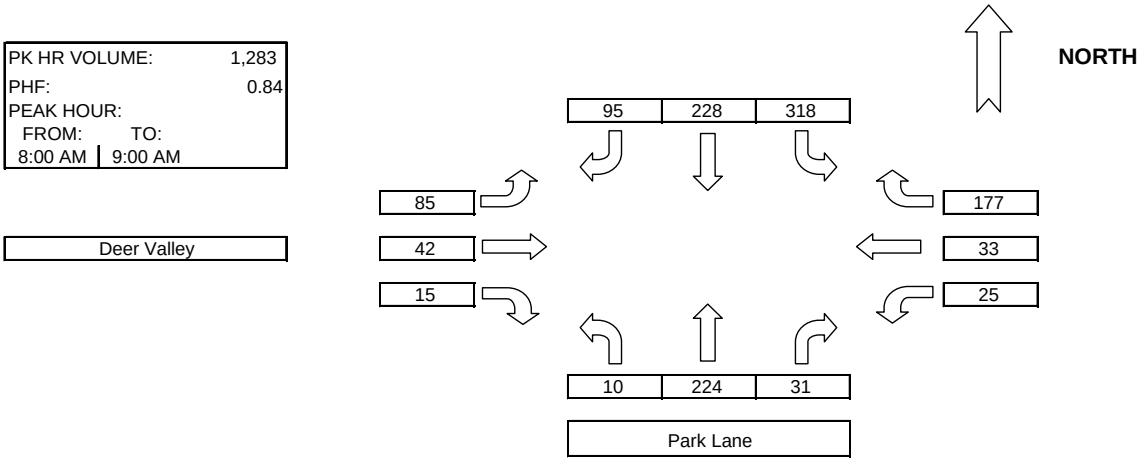

MID DAY OFF-PEAK HOUR VOLUMES

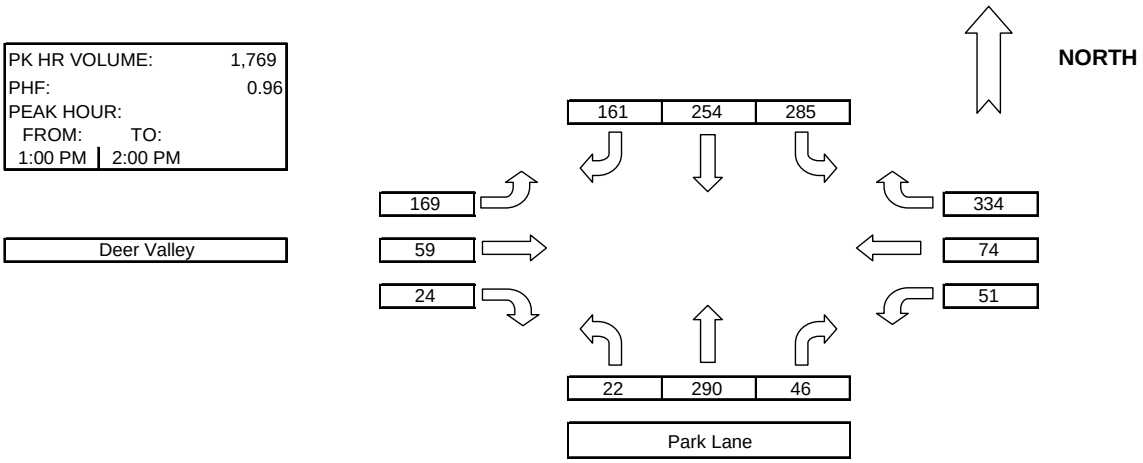

PM PEAK HOUR VOLUMES

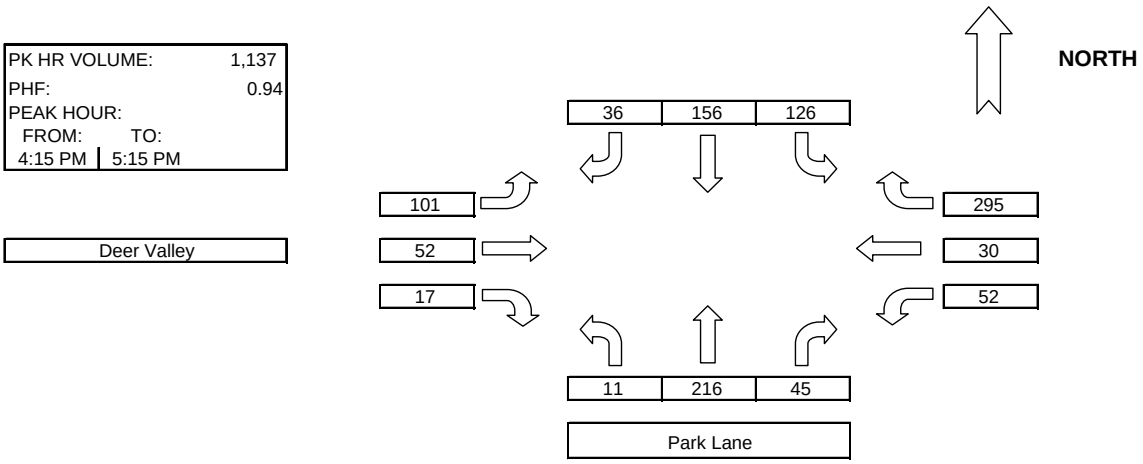

Figure 3.52: Turning movement counts for Park Lane – Deer Valley

AM PEAK HOUR VOLUMES

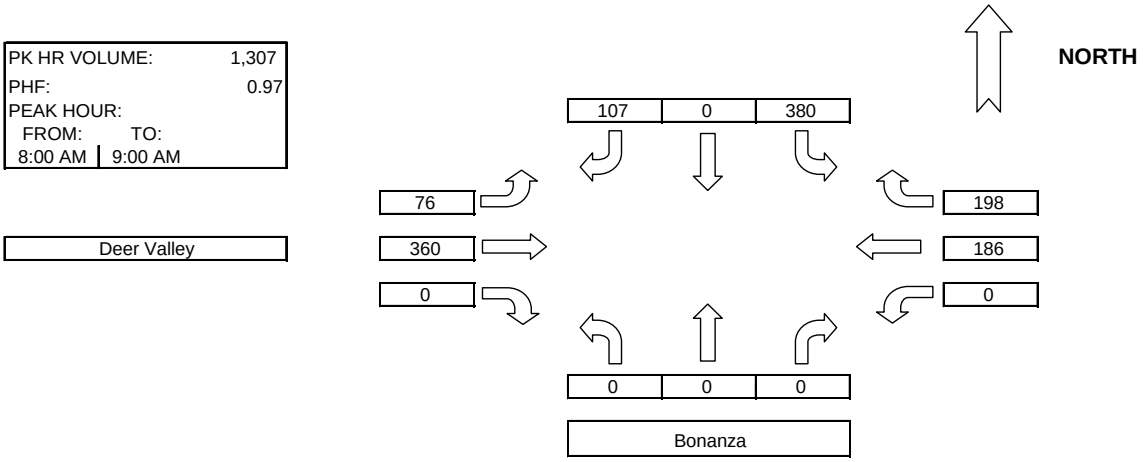

MID DAY OFF-PEAK HOUR VOLUMES

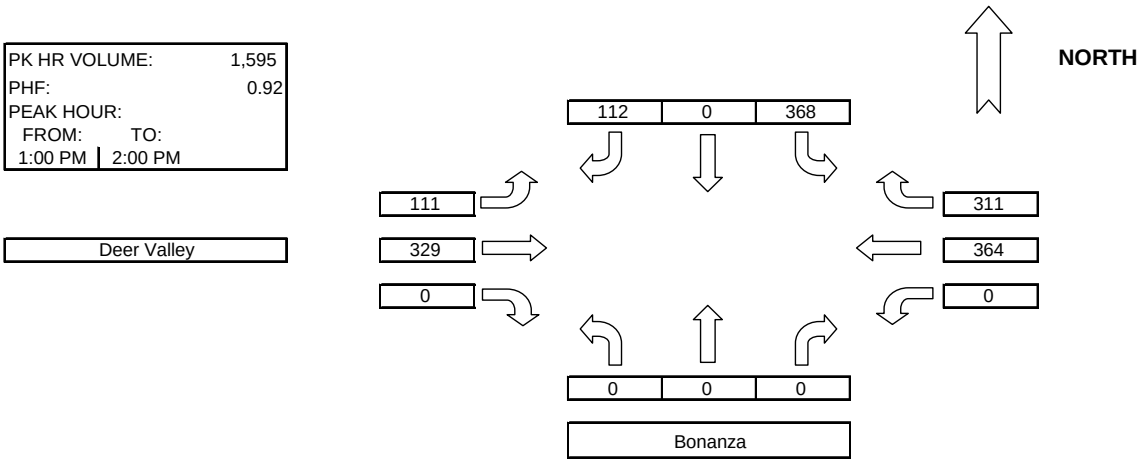

PM PEAK HOUR VOLUMES

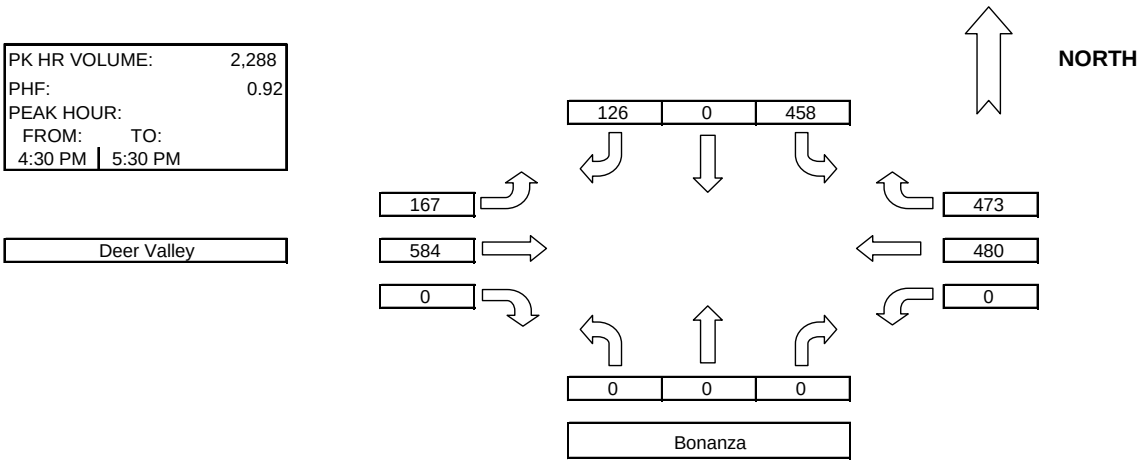

Figure 3.53: Turning movement counts for Bonanza Dr– Deer Valley

AM PEAK HOUR VOLUMES

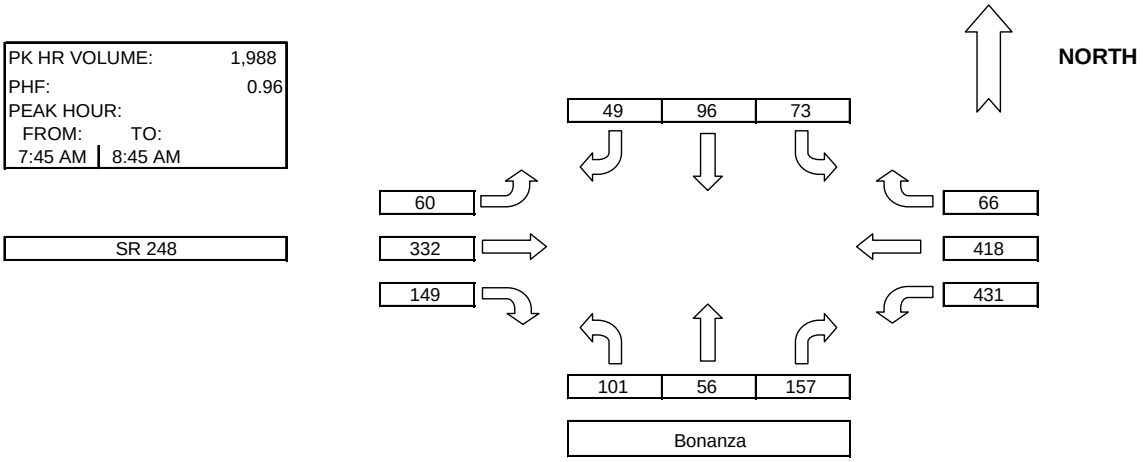

MID DAY OFF-PEAK HOUR VOLUMES

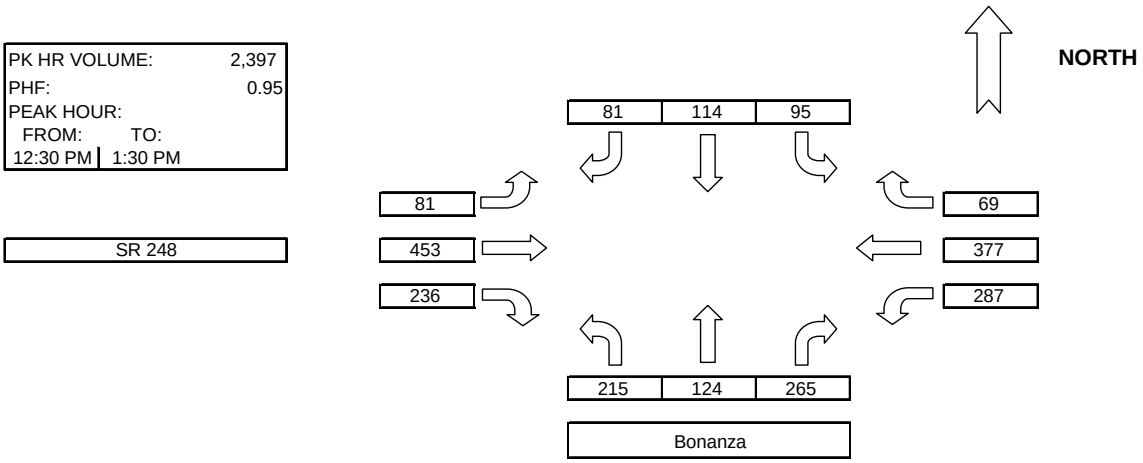

PM PEAK HOUR VOLUMES

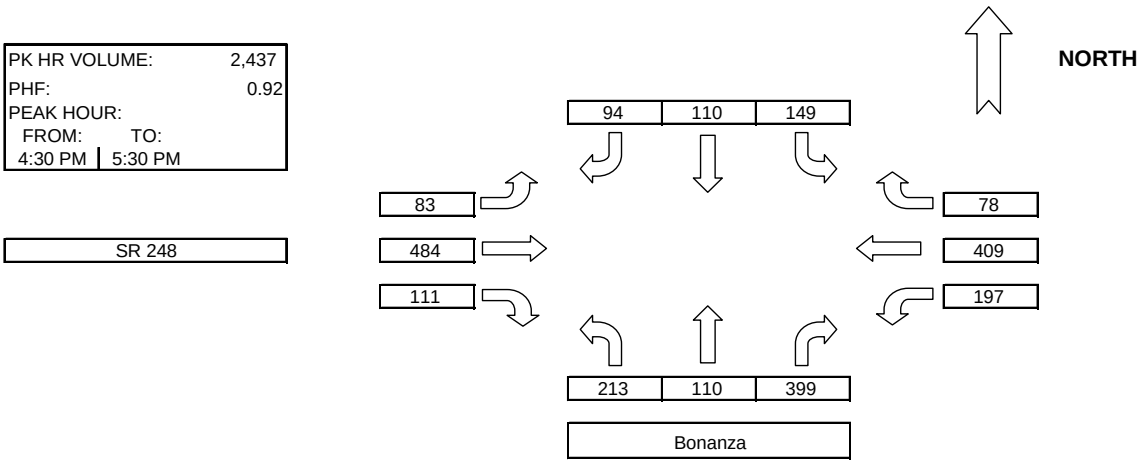

Figure 3.54: Turning movement counts for Bonanza Dr – SR248

AM PEAK HOUR VOLUMES

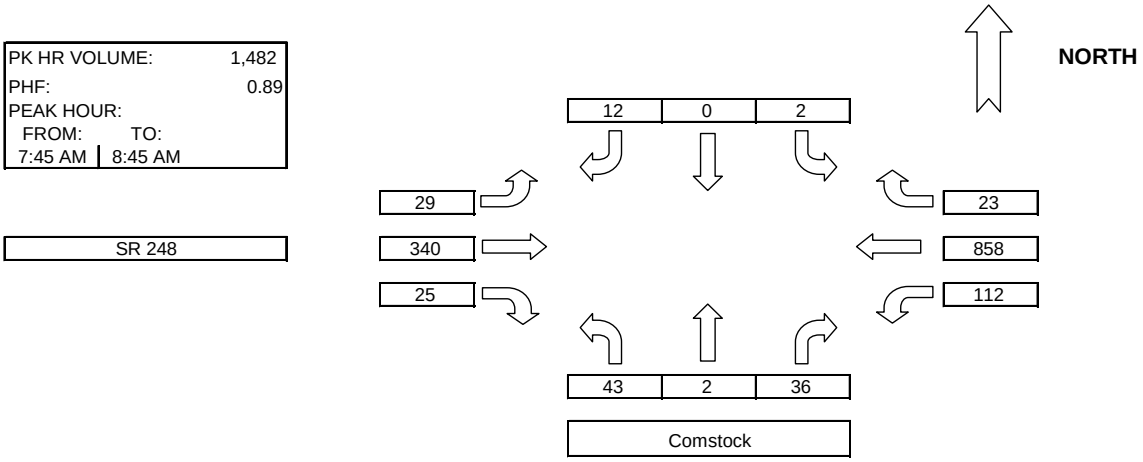

MID DAY OFF-PEAK HOUR VOLUMES

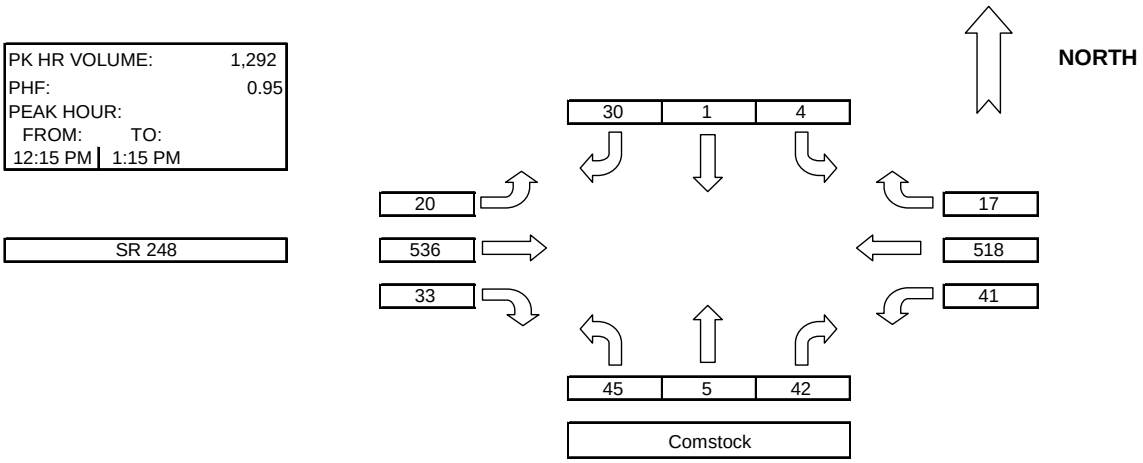

PM PEAK HOUR VOLUMES

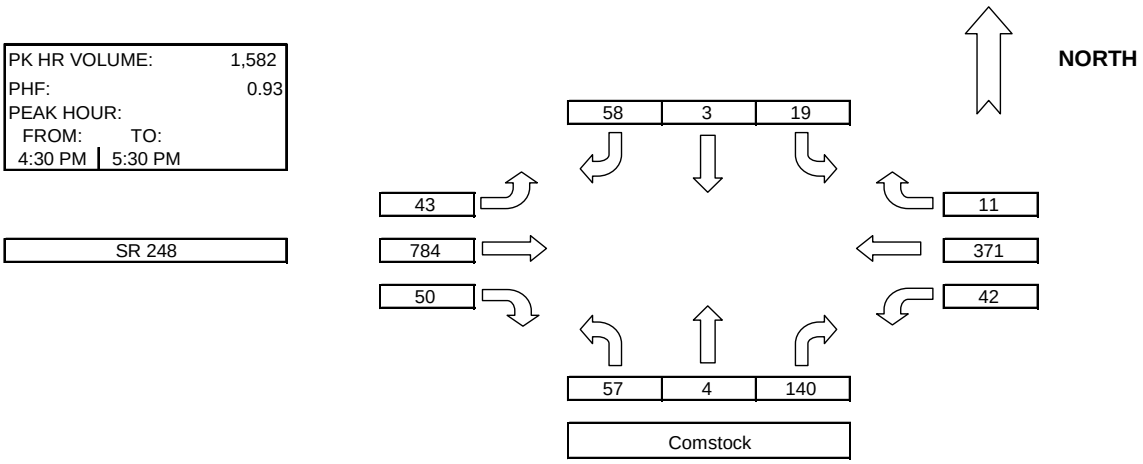

Figure 3.55: Turning movement counts for Comstock Rd – SR248

3.1.7 Saturation Flow

The following results represent collected average saturation flows. The saturation flow rate is the flow rate in veh/h that the lane group can carry if it has the green indication continuously. The saturation flow rates have been collected only for selected traffic movements. The saturation flow rates were collected using JAMAR counting boards and a methodology that is widely accepted for measuring saturation flows. Most of the traffic flows on side streets along SR 224 were so low that it was impossible to collect reliable saturation flows. The method for collecting saturation flows relies on several (at least 5-6) vehicles passing over the stop bar during a green time period. However, no more than 2 or 3 vehicles passed the stop bar for most of the side street movements.

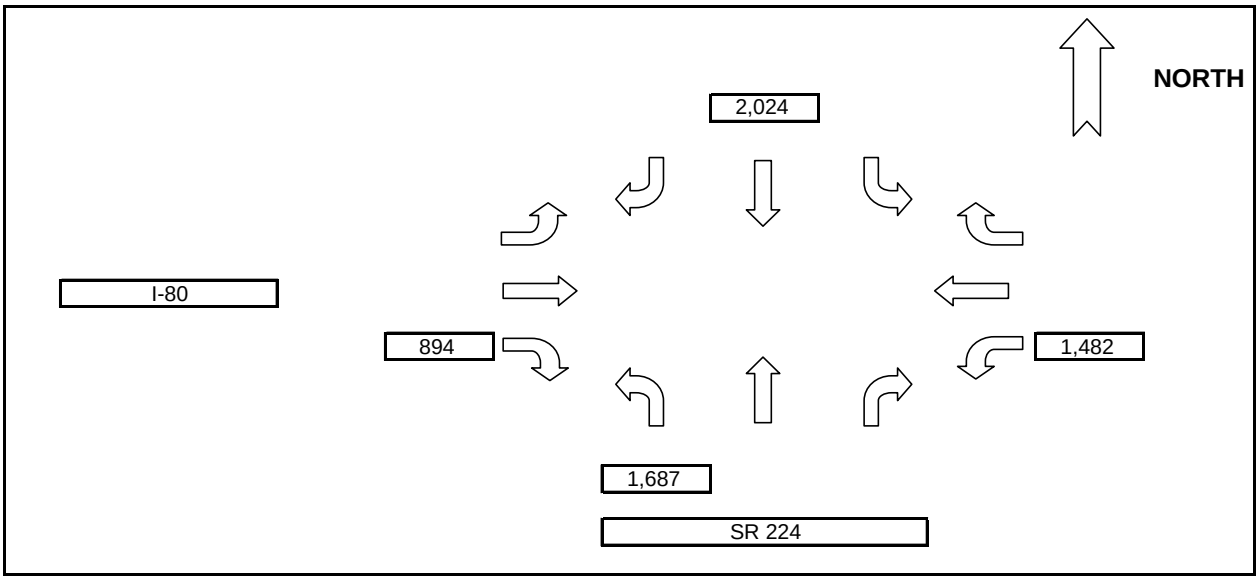

Figure 3.56: Saturation flow counts for Kimball Junction

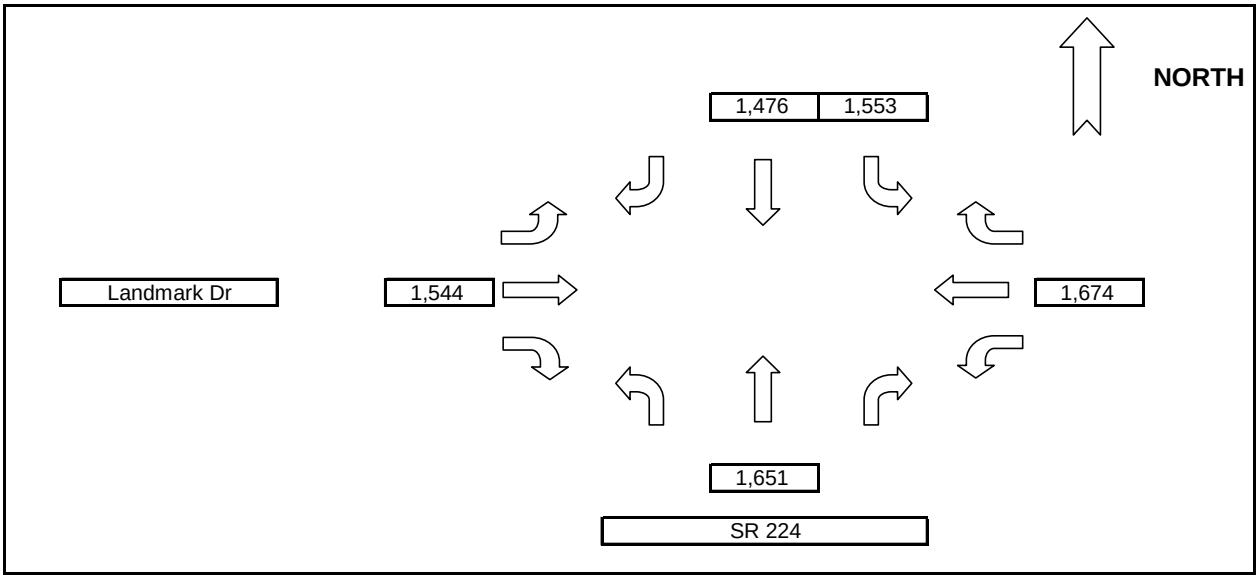

Figure 3.57: Saturation flow counts for SR224 – Landmark Dr

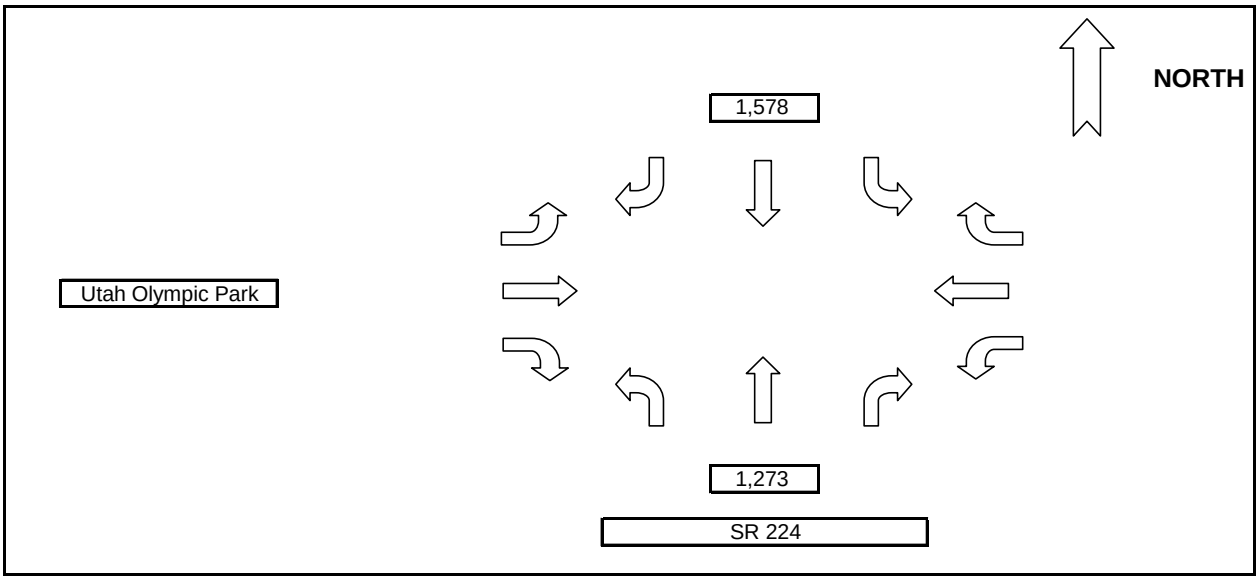

Figure 3.58: Saturation flow counts for SR224 – Utah Olympic Park

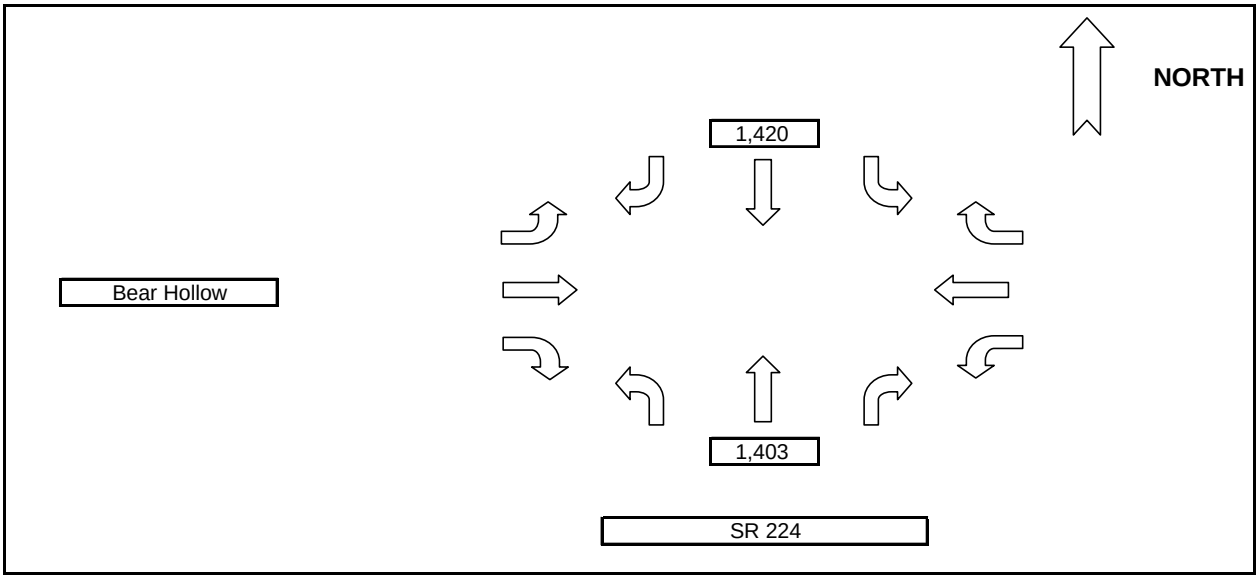

Figure 3.59: Saturation flow counts for SR224 – Bear Hollow

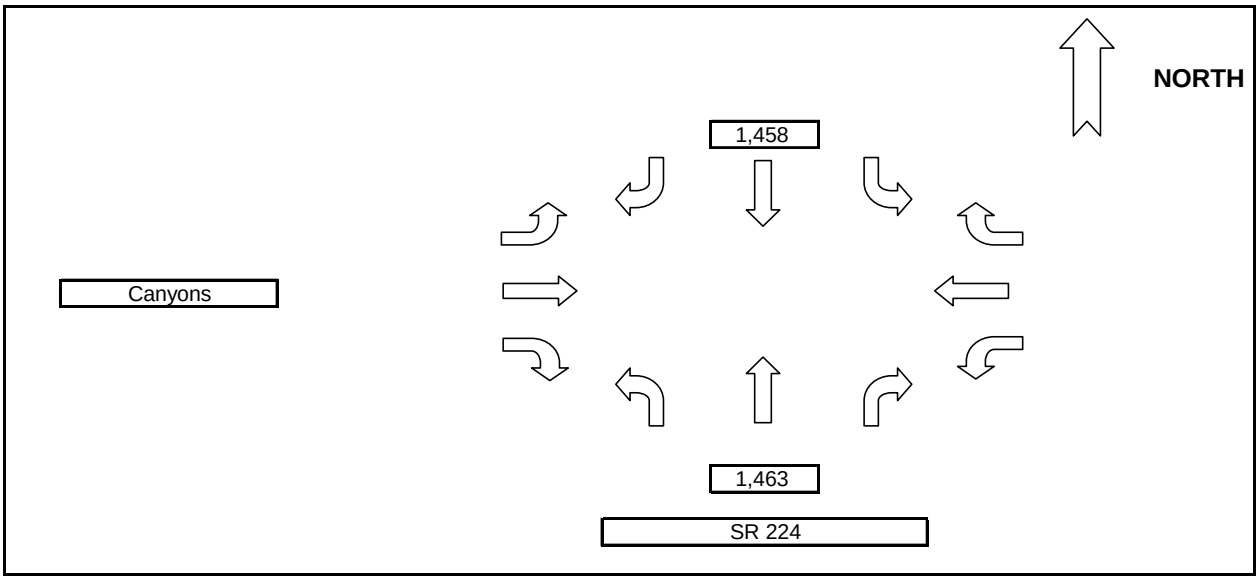

Figure 3.60: Saturation flow counts for SR224 – Canyons

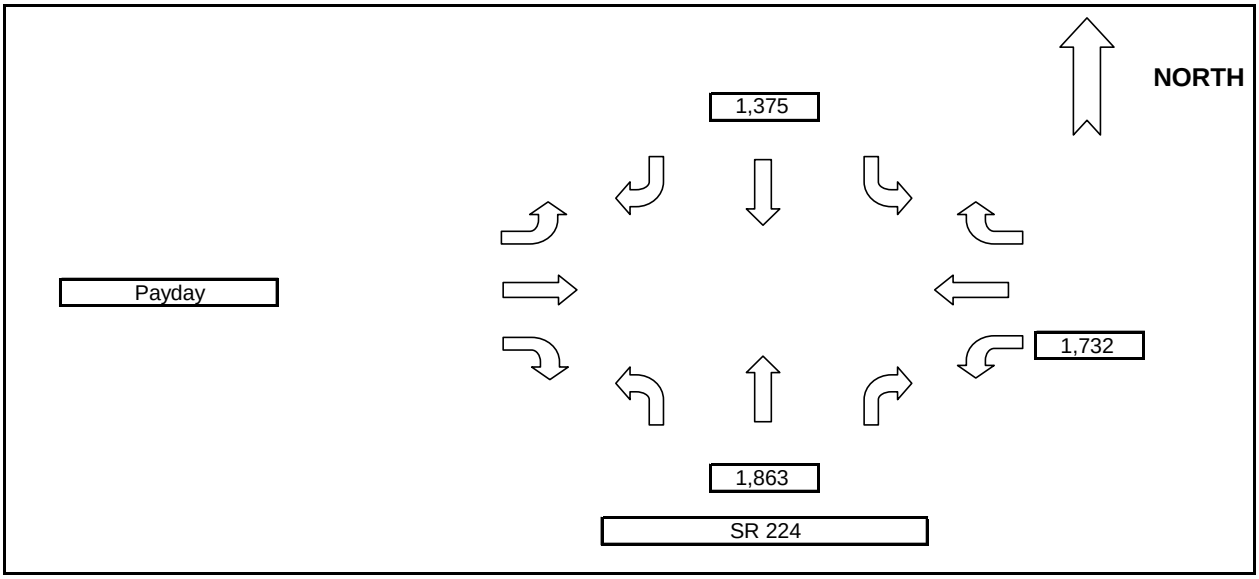

Figure 3.61: Saturation flow counts for SR224 – Payday

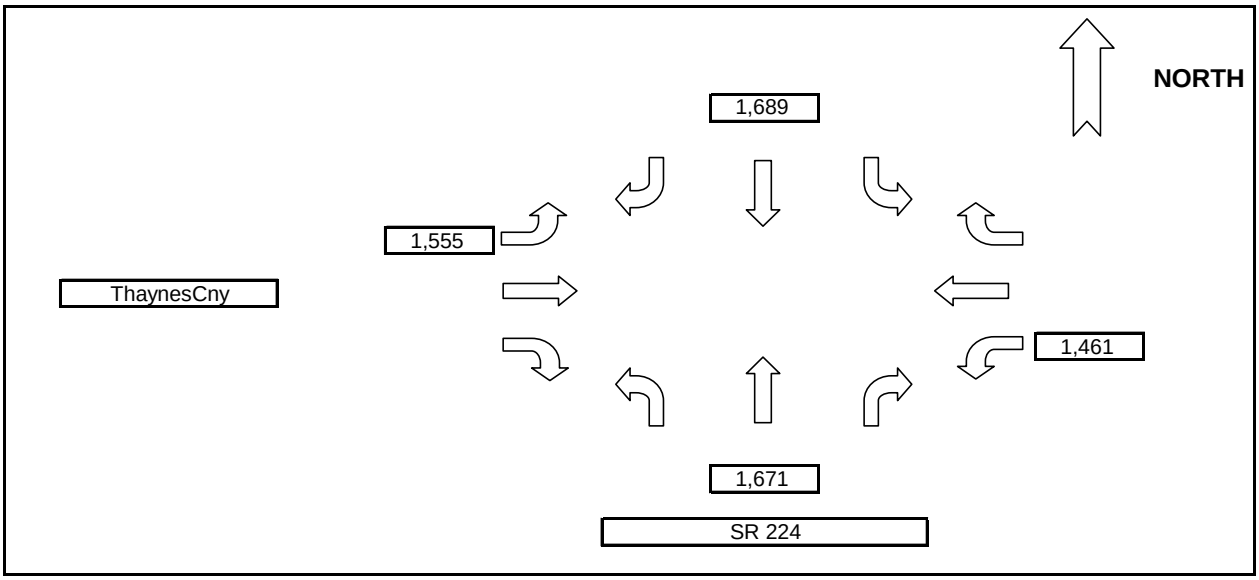

Figure 3.62: Saturation flow counts for SR224 – Thaynes Cny

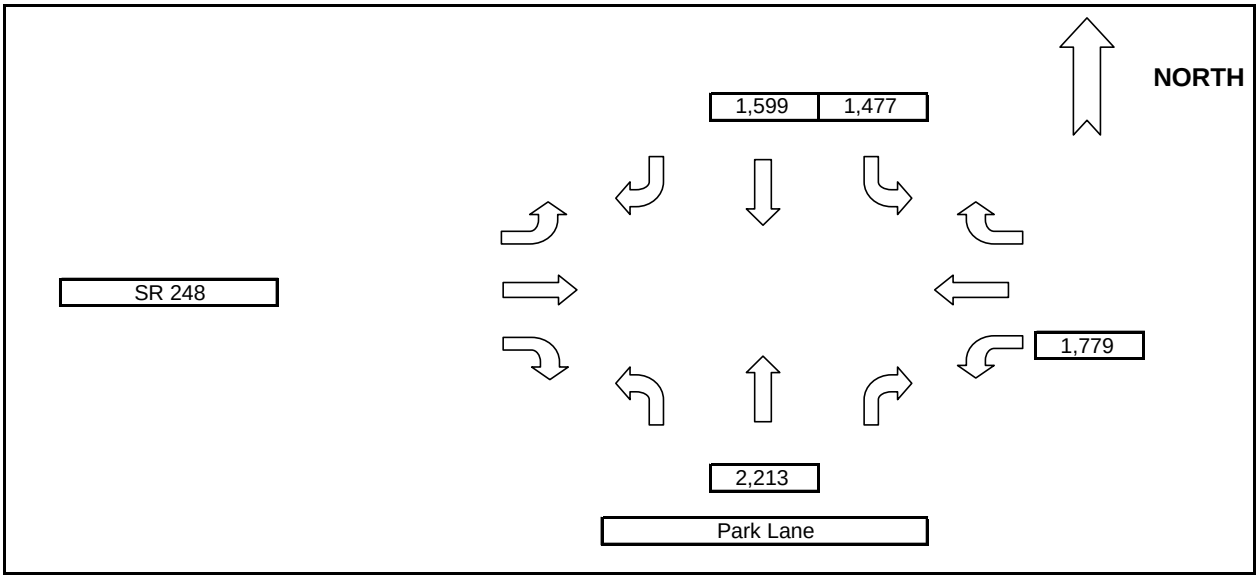

Figure 3.63: Saturation flow counts for Park Lane – SR248

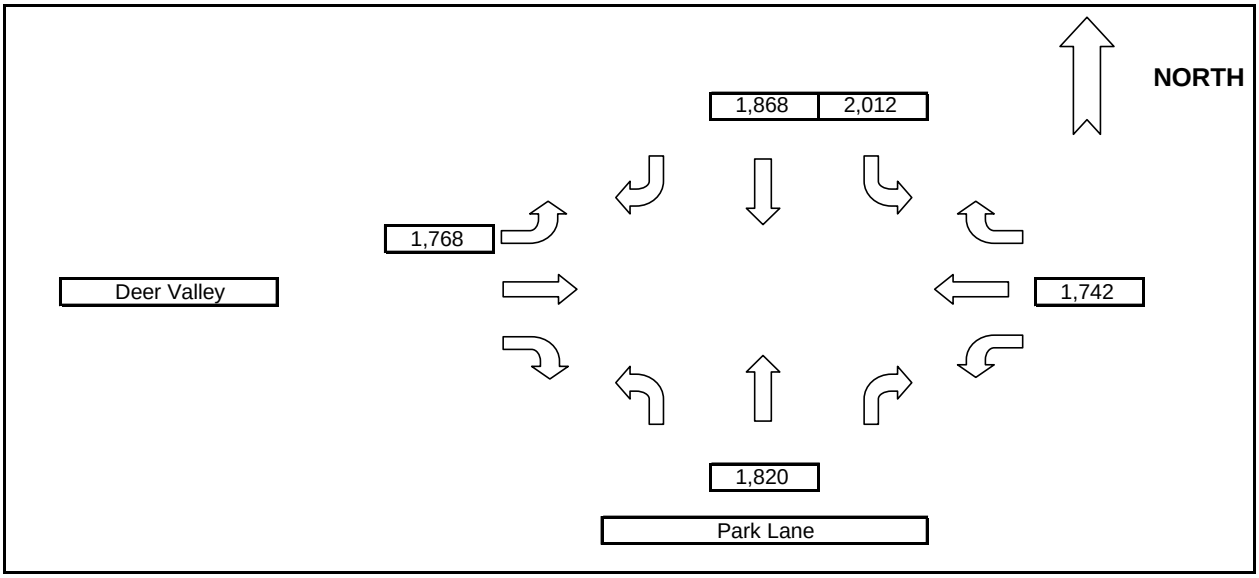

Figure 3.64: Saturation flow counts for Park Lane – Deer Valley

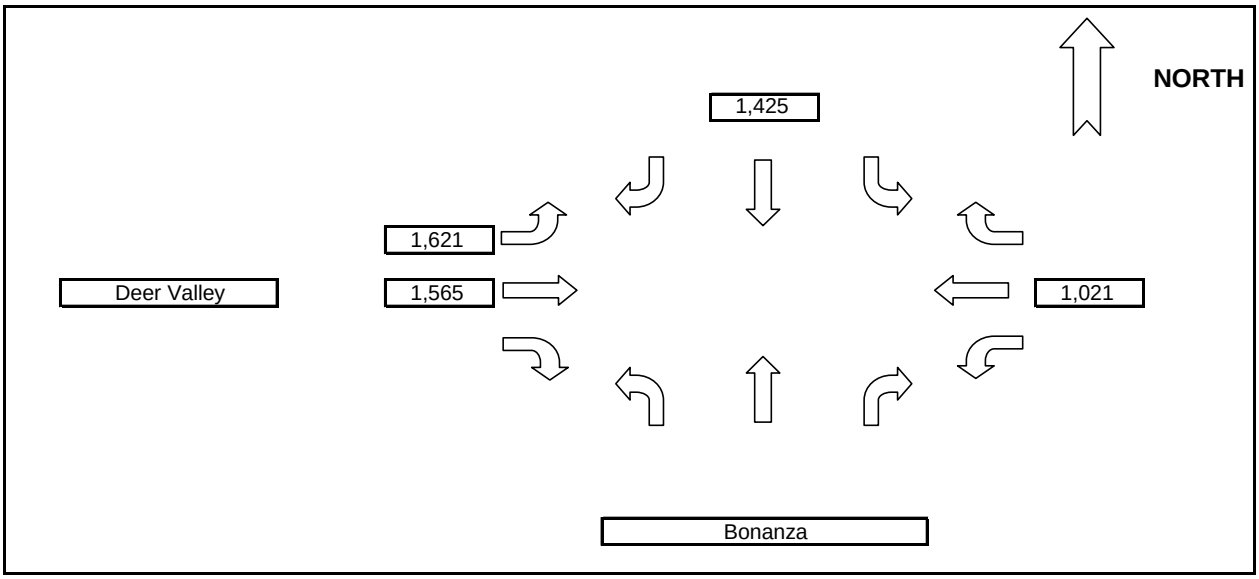

Figure 3.65: Saturation flow counts for Bonanza Dr– Deer Valley

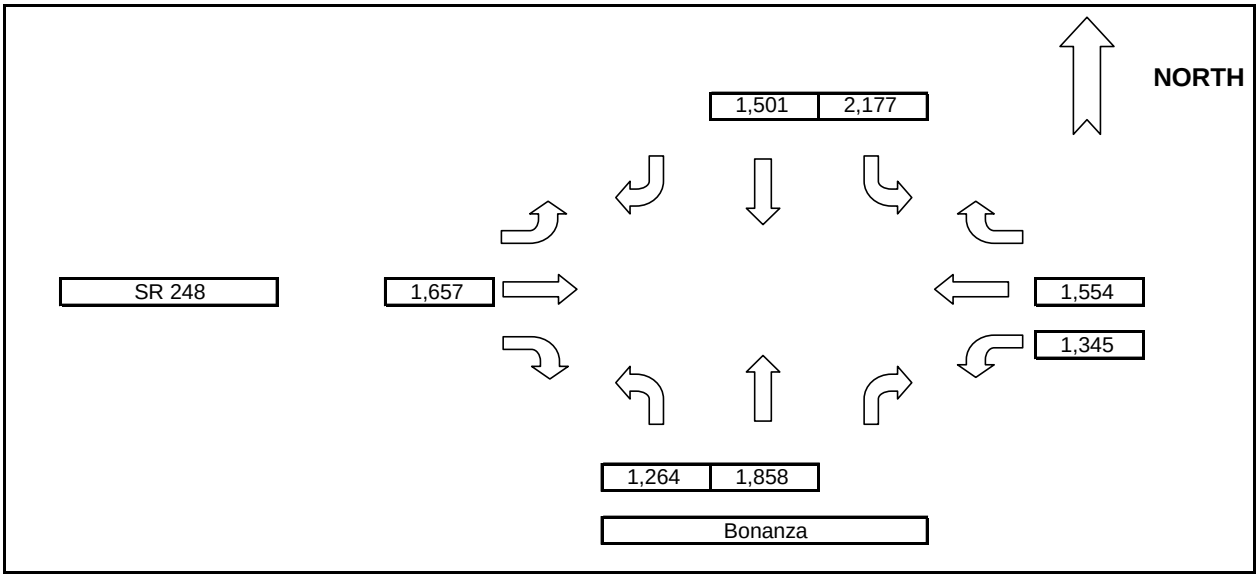

Figure 3.66: Saturation flow counts for Bonanza Dr– SR248

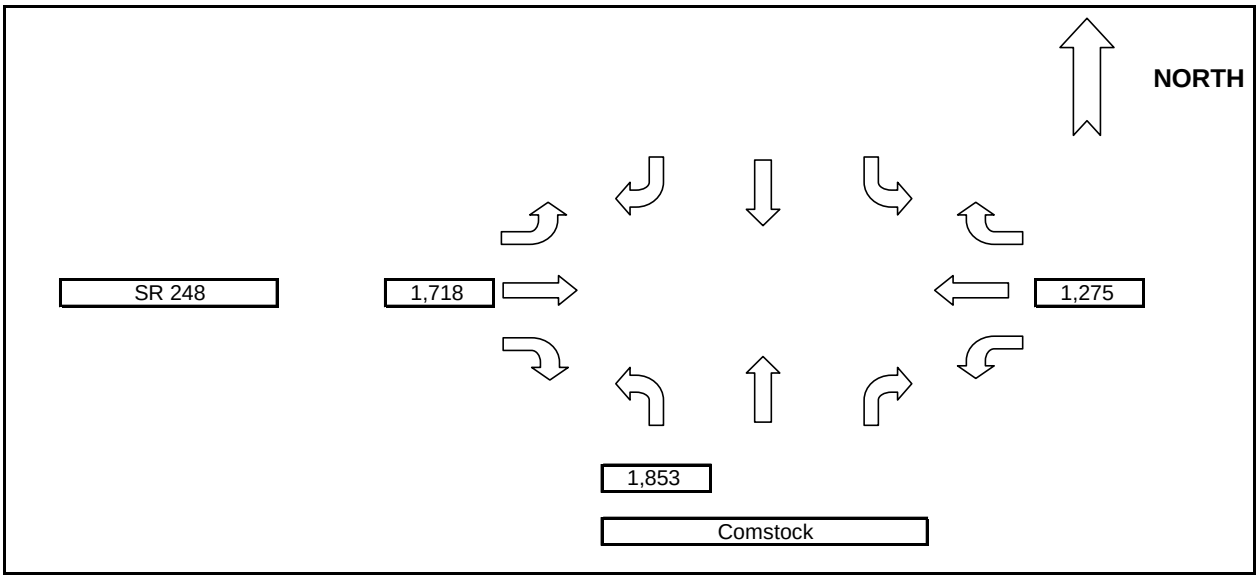

Figure 3.67: Saturation flow counts for Comstock Rd – SR248

4. CONCLUSIONS

The "Before ATCS Installation" data collection can be summarized as a successful data collection project. The UTL team collected all relevant data that were planned to be collected. However, recent developments in the Bear Hollow area tend to spoil the validity of several traffic metrics collected during the "before" data collection project. Two traffic signals have been planned for installation in the next year. In addition, one intersection will be completely redesigned and moved from its current location. These changes in traffic signal infrastructure will have an impact on the validity of the evaluation of ATCS in Park City. Most of the data metrics qualifying traffic control performance for the whole system will be invalid. For example, for the data collection after the ATCS is installed, recordings from the travel time runs are likely to report a higher number of stops, total delay, and travel times due to additional stops at new signalized intersections. The expected low-grade data that will be affected by installations of new traffic signals are:

- Journey time runs
- System-wide stops
- Overall delay
- Running speed

The collected data that can still be used to compare before and after performances are:

- Turning movement measurements
- Sat flow rates
- Intersection-based control delay

Another problem is that additional "before" data cannot be collected after all the new signalized intersections are in place. The process of installing new traffic signals will coincide with the process of installing the ATCS. Therefore, by the time all new traffic signals are installed, SCATS will also be installed and there will be no opportunity for another "before" data collection.

Considering the shortcomings of the existing approach that was influenced by outside factors, we suggest:

- Make use of limited good "before" data – this approach limits evaluation to compare only individual intersections as opposed to comparisons of the performances of the entire system before and after SCATS is installed
- Focus on a "with/without" evaluation instead of a "before/after" approach – this approach depends on the political decision to turn SCATS off for few weeks
- Build the VISSIM network according to the model – this is the most rigorous approach that will enable comparison. It also gives UDOT the opportunity to explore various traffic signal scenarios and future expansions of the system (not only in Park City, but on any other network), such as:
-
    - "before/after" approach
    - system expansion
    - "freak" events

REFERENCES

NCHRP - National Cooperative Highway Research Program. ‘Quantifying Congestion’. Volume 1 – Final Report. NCHRP Report 398. Transportation Research Board, 1997, Washington, D.C.

Garber, Nicholas J., Hoel, Lester A., Traffic & Highway Engineering, 2001